HITACHI

TECHNICAL CATALOGUE

air H_2O 800

R290 SERIES



MODELS

OUTDOOR UNITS
M: RASM-(2-6)(V)TW2E

INDOOR UNITS - HYDROSPLIT SYSTEM
H: HWM-W2E(-B)
H Combi: HWD-W2E-220S(-K)

INDOOR UNITS - CONTROL BOX SYSTEM
CONTROL BOX: ATW-CBX-01



Cooling & Heating

TCGB0154 rev.1 - 12/2025

Contents

01 General information 1
02 General data 17
03 Capacity and selection data 40
04 Sound data 50
05 Working range 57
06 General dimensions 64
07 Refrigerant cycle and hydraulic circuit 76
08 Refrigerant notes and water piping 81
09 Electrical and control settings 99
10 Additional configurations 128
11 Complementary system: Cascade controller 143

General Index

1. General information 1

1.1 General information 3

1.1.1 General notes 3

1.1.2 Introduction 3

1.1.2.1 Overview of **airH2O 800** system 4

1.1.2.2 Summary of operations 5

1.2 Applied symbols 7

1.3 Norms and regulations 8

1.3.1 Appropriate refrigerant 8

1.3.2 Consequences of charging non-specified refrigerant 8

1.4 Classification and product guide 9

1.4.1 Classification of the units 9

1.4.1.1 Outdoor units 9

1.4.1.2 Indoor units- Hydrosplit system 9

1.4.1.3 Indoor units- Control Box system 10

1.4.2 Product guide 10

1.4.2.1 Outdoor units 10

1.4.2.2 Indoor units- Hydrosplit system 11

1.4.2.3 Indoor units- Control Box system 12

1.4.2.4 Indoor units- Complementary system 12

1.4.3 Accessory code list 13

1.4.3.1 Cooling kit accessories 13

1.4.3.2 Control accessories 13

1.4.3.3 Temperature sensor accessories 15

1.4.3.4 Water circuit accessories 15
1.4.3.5 Outdoor unit accessories 16
2. General data 17
2.1 Capacity tables 19
2.1.1 Nominal capacity-performance tables 19
2.1.1.1 Considerations 19
2.1.1.2 Capacity-performance data 20
2.2 ERP performance data 21
2.2.1 General considerations 21
2.2.2 General ERP data for space heaters 22
2.2.2.1 ERP data 22
2.2.2.2 ERP additional data 23
2.2.3 General ERP data for combi heaters 24
2.2.4 General ERP data for hot water storage tanks 24
2.3 Cooling data (EN 14825) 25
2.4 General specifications 26
2.4.1 Considerations 26
2.4.2 Outdoor units 27
2.4.3 Indoor units- Hydrosplit system 28
2.4.4 Domestic hot water tank 30
2.4.5 Indoor units- Control Box system 31
2.4.6 Indoor units- Complementary system 31
2.5 Component data 32
2.5.1 Outdoor units 32
2.5.2 Indoor units- Hydrosplit system 34
2.6 Electrical data 37

2.6.1 Considerations 37
2.6.2 Outdoor units 38
2.6.3 Indoor units- Hydrosplit system 38
2.6.4 Indoor units- Control Box system 39
2.6.5 Indoor units- Complementary system 39
3. Capacity and selection data 40
3.1 Maximum heating capacity tables (kW) 41
3.1.1 Hydrosplit system / Control Box system 42
3.1.2 Hydrosplit system + heaters / Control Box system + WEH-6E 44
3.2 Maximum cooling capacity table (kW) 46
3.2.1 Hydrosplit system / Control Box system 46
3.3 Correction factors 48
3.3.1 Correction factor owing to use of glycol 48
3.3.2 Correction factor depending on the altitude 49
3.4 Hi-ToolKit selection software 49
4. Sound data 50
4.1 Sound power level 51
4.1.1 Outdoor units 51
4.1.2 Indoor units- Hydrosplit system 52
4.2 Considerations for sound pressure level 52
4.3 Sound pressure level 53
4.3.1 Outdoor units 53
4.3.2 Indoor units- Hydrosplit system 54
4.4 Sound pressure reduction 55
4.4.1 Estimated sound reduction based on the outdoor unit distance 55

4.4.2 Estimated sound reduction based on night shift function 55
4.5 Sound power reduction 56
4.5.1 Estimated sound reduction based on night shift function 56
5. Working range 57
5.1 Power supply working range 58
5.2 Temperature working range 58
5.2.1 Space heating 59
5.2.2 DHW 59
5.2.3 Swimming pool heating 60
5.2.4 Space cooling (necessary cooling kit) 60
5.3 R290 hydraulic working range 61
5.3.1 Hydraulic data 61
5.3.2 Minimum installation water volume 61
5.3.3 Pump performance curves 62
6. General dimensions 64
6.1 Name of parts and dimensional data 65
6.1.1 Outdoor units 65
6.1.2 Indoor units- Hydrosplit system 67
6.1.3 Indoor units- Control Box system 71
6.1.4 Indoor units- Complementary system 72
6.2 Service space 73
6.2.1 Outdoor units 73
6.2.2 Indoor units- Hydrosplit system 73
6.2.3 Indoor units- Control Box system 75
6.2.4 Indoor units- Complementary system 75
7. Refrigerant cycle and hydraulic circuit 76

7.1 Outdoor units 77
7.1.1 **airH2O 800M**- RASM-(2-3.5)VTW2E 77
7.1.2 **airH2O 800M**- RASM-(4-6)(V)TW2E 78
7.2 Indoor units- Hydrosplit system 79
7.2.1 **airH2O 800H**- HWM-W2E 79
7.2.2 **airH2O 800H**- HWM-W2E-B 79
7.2.3 **airH2O 800H Combi**- HWD-W2E-220S(-K) 80
8. Refrigerant notes and water piping 81
8.1 General notes before performing piping work 82
8.1.1 Piping work 82
8.1.2 Suspension of water pipes 83
8.2 R290 refrigerant circuit 83
8.2.1 General notes R290 refrigerant 83
8.2.2 Precautions in the event of gas refrigerant leaks 84
8.3 Refrigerant charge amount 84
8.4 Hydraulic connections 85
8.4.1 Hydrosplit system- **airH2O 800M** + **airH2O 800H** 85
8.4.2 Hydrosplit system- **airH2O 800M** + **airH2O 800H Combi** 86
8.4.3 Control Box system- **airH2O 800M** + Control Box 86
8.5 Parts name list 87
8.6 Space heating and DHW for **airH2O 800 Hydrosplit** 88
8.6.1 Additional hydraulic necessary elements for space heating 88
8.6.2 Additional hydraulic necessary elements for DHW 88
8.6.3 Additional hydraulic optional elements for DHW 90
8.6.4 Additional hydraulic necessary elements for DHW (UK market) 90
8.6.5 Requirements and recommendations for the hydraulic circuit 91

8.6.6 Anti-freezing protection for water circuit 92
8.6.7 Insulation 95
8.6.8 Water piping 95
8.6.8.1 Water piping length 95
8.6.8.2 Water piping size 96
8.6.9 Water quality 97
9. Electrical and control settings 99
9.1 General check 100
9.2 Electrical connection 102
9.2.1 System wiring diagram 103
9.2.2 Transmission wiring between outdoor and indoor units 104
9.2.3 Outdoor units power wiring connection 106
9.2.4 Indoor units power wiring connection 107
9.2.5 Unit controller (PC-ARFH3E) connection 108
9.2.6 Optional accessories connection 108
9.3 Wiring size and protection devices minimum requirements 109
9.3.1 Outdoor units 109
9.3.2 Indoor units- Hydrosplit system 110
9.3.3 Indoor units- Control Box system 111
9.4 Setting of DIP switches and rotary switches 111
9.4.1 Location of DIP switches and rotary switches 111
9.4.2 Function of DIP switches and rotary switches 112
9.4.2.1 Outdoor unit PCB1- Refrigerant cycle 113
9.4.2.2 Outdoor unit PCB2- Inverter (DRV075, only single-phase units) 116
9.4.2.3 Indoor unit PCB- Water cycle 116

9.5 Optional indoor unit wiring (accessories) 122
9.5.1 Summary of the terminal board connections 122
10. Additional configurations 128
10.1 Additional configurations 129
10.1.1 For commissioning 129
10.1.2 To protect the system 129
10.1.3 User comfort for space heating and space cooling 130
10.1.4 Options available when using Hitachi wired or wireless thermostat 130
10.1.5 Controls for power consumption or noise reduction 131
10.1.6 For energy and capacity calculation 131
10.1.7 For unit operation 132
10.1.8 To customise hydraulic installation 133
10.1.9 For DHW operation 133
10.2 Optional external input, output and sensor configuration signals 134
10.2.1 Input signals and input ports 135
10.2.2 Output signals and output ports 136
10.2.3 Additional functions by accessory sensor 139
10.2.3.1 Function of sensors 139
10.3 Outdoor unit optional functions 140
10.3.1 Change of defrost condition 140
10.3.2 Outdoor crankcase heater management 140
10.3.3 Fixed target setting for primary water pump 141
10.3.4 Selecting the drain heater operating pattern 142
10.3.5 Outdoor fan management 142
11. Complementary system: Cascade controller 143
11.1 Main features 145

11.1.1 Multi configurations 145
11.1.2 Installation benefits 146
11.1.3 Maintenance benefits 149
11.1.4 Control features 150
11.1.5 Cascade control 153
11.1.6 Rotary token control 154
11.1.7 Synchronized defrost 155
11.2 General data 155
11.3 Electrical data 155
11.4 Electrical wiring 156
11.5 Transmission wiring 157
11.5.1 Connections on the Terminal board 1 (TB1) 157
11.5.2 Connections on the Terminal board 2 (TB2) 157
11.5.3 Summary of the terminal board connections for Cascade Controller ... 160
11.5.4 Location of DIP switches and rotary switches 162
11.5.4.1 Function of DIP switches and rotary switches 162
11.5.4.2 DSW1 163
11.5.4.3 DSW2 163
11.5.4.4 DSW3 164
11.5.4.5 DSW4 164
11.5.4.6 DSW5 165
11.5.4.7 DSW6 (only if available) 165
11.5.4.8 DSW7 166
11.5.4.9 DSW15 and RSW2 166
11.5.4.10 DSW16 and RSW1 167
11.5.4.11 SSW1 167

11.5.4.12 SSW2 168
11.5.4.13 LED indication 168
11.6 Optional functions 168
11.6.1 Optional functions for space heating or space cooling 168
11.6.2 Optional functions for DHW 169
11.6.3 Optional functions for Heat pump 169
11.6.3.1 Optional functions for Unit controller (PC-ARFH3E) 170
11.6.4 Optional external input/output configuration signals 170
11.7 Additional functions by accessory sensor 173

General information

1.1 General information 3

1.1.1 General notes 3

1.1.2 Introduction 3

1.1.2.1 Overview of **airH2O 800** system 4

1.1.2.2 Summary of operations 5

1.2 Applied symbols 7

1.3 Norms and regulations 8

1.3.1 Appropriate refrigerant 8

1.3.2 Consequences of charging non-specified refrigerant 8

1.4 Classification and product guide 9

1.4.1 Classification of the units 9

1.4.1.1 Outdoor units 9

1.4.1.2 Indoor units- Hydrosplit system 9

1.4.1.3 Indoor units- Control Box system 10

1.4.2 Product guide 10

1.4.2.1 Outdoor units 10

1.4.2.2 Indoor units- Hydrosplit system 11

1.4.2.3 Indoor units- Control Box system 12

1.4.2.4 Indoor units- Complementary system 12

1.4.3 Accessory code list 13

1.4.3.1 Cooling kit accessories 13

1.4.3.2 Control accessories 13

1.4.3.3 Temperature sensor accessories.....15
1.4.3.4 Water circuit accessories 15
1.4.3.5 Outdoor unit accessories 16

1.1 General information

1.1.1 General notes

© Copyright 2025 Johnson Controls-Hitachi Air Conditioning Spain, S.A.U. – All rights reserved.

No part of this publication may be reproduced, copied, filed or transmitted in any shape or form without the permission of Johnson Controls-Hitachi Air Conditioning Spain, S.A.U.

Within the policy of continuous improvement of its products, Johnson Controls-Hitachi Air Conditioning Spain, S.A.U. reserves the right to make changes at any time without prior notification and without being compelled to introducing them into previously sold products. This document may therefore have been subject to amendments during the life of the product.

The English version is the original one; other languages are translated from English. Should any discrepancy occur between the English and the translated versions, the English version shall prevail.

Hitachi makes every effort to offer correct, up-to-date documentation. Despite this, printing errors cannot be controlled by Hitachi and are not its responsibility.

As a result, some of the images or data used to illustrate this document may not refer to specific models. No claims will be accepted based on the data, illustrations and descriptions included in this manual.

No type of modification must be made to the equipment without prior, written authorization from the manufacturer.

This air to water heat pump has been designed for standard water heating for human beings. For use in other applications, please contact your Hitachi dealer or service contractor.

1.1.2 Introduction

Hitachi proudly announces the newest air-to-water heat pumps in its award-winning **airH2O 800** range.

airH2O 800 units produce heating and domestic hot water like any oil or gas boiler, but transforming renewable energy from the outside air into heat. Air to water heat pumps extract the free energy present in the air, which is enough to heat a home up to a comfortable temperature, even on the coldest winter day. Every kW of electricity used to power the heat pump can yield up to more than 5 kW of energy for heating; this provides savings of up to 80% on heating expenses compared to a traditional fossil fuel boiler.

The new **airH2O 800** series, based on state-of-the-art technology, does not only achieve an outstanding performance in space heating but also provides domestic hot water with high efficiency. Additionally, cooling operation for summer can also be provided installing the dedicated cooling kit accessory of Hitachi.

The system is simple to control; its new user controller (PC-ARFH3E) improves the acclaimed and successful design used with the existing LCD controller and provides a great deal of new functions like: live view, energy consumption data, fan coils control, weekly timer, wizard to set timer, override function, etc.

1.1.2.1 Overview of airH2O 800 system

The new **airH2O 800** system consist of an air to water heat pump system composed by an outdoor unit (**airH2O 800M**, refrigerant cycle) and an indoor unit (water cycle) connected just with water pipes, it is, without the need of using refrigerant pipes.

The **airH2O 800M** is designed to be installed outdoors, in any kind of dwelling (house, apartment, villa,…), whether in a new construction or in an existing building. Installation work is greatly simplified thanks to the lack of refrigerant piping connections.

For safety reasons, this new **airH2O 800** units have been designed to avoid any electrical works into the unit's cabinet.

This means that all the hydraulic control and the terminal have been removed from the outdoor unit. Only 1 outdoor to indoor connection must be performed (H-LINK).

The wide range of **airH2O 800** products is basically divided in two types of system:

- Control Box system
- Hydrosplit system

◆ Control Box system - airH2O 800M + Control Box

The Control Box system has the advantage of placing the control terminal board indoors, simplifying wiring installation and avoiding any additional connection to the **airH2O 800M** (only power supply and H-LINK):

Thus, it can be used in 2 circumstances:

- On those sites where an indoor unit is not required.
- For customised solutions. In this case, all the indoor elements are connected to the Control Box.

◆ Hydrosplit system - airH2O 800M + airH2O 800H / airH2O 800H Combi

Two types of indoor unit can be used in Hydrosplit systems:

airH2O 800H

The indoor unit of **airH2O 800H** is designed for space heating, in a wall-mounted installation with an embedded buffer tank and a secondary water pump.

It is offered in 2 different versions, one featuring a 6 kW electrical heater, and the other being prepared to be combined with a complementary boiler.

Moreover, both can be combined with an external tank for domestic hot water production. A 200 litres and a 300 litres tanks are offered as accessories for this.

airH2O 800H Combi

The indoor unit of **airH2O 800H Combi** is conceived as a floor standing unit with an embedded buffer tank and a secondary water pump. It is prepared for heating operation as well as for domestic hot water production. For this purpose, it has a built-in domestic hot water 220 litres tank.

Furthermore, new **airH2O 800H Combi** models have been designed for the UK market that meet the UK requirements referred in the UK Building Regulations.

1.1.2.2 Summary of operations

Space heating

airH2O 800 units are factory-supplied ready for space heating operation. Different heating installation configurations can be selected, providing a comfortable atmosphere all year long, even in the coldest climates:

- **Mono-valent system**
  The air to water heat pump is sized to provide 100% of the heating requirements on the coldest day the year.
- **Mono-energy system**
  This is the most popular configuration. The air to water heat pump is sized to provide 80% of the heating requirements on the coldest days of the year. An auxiliary electric heater is used to provide the additional heating required on cold days. This option usually results in an ideal balance between installation costs and future energy consumption, as proven by its popularity in colder climates than ours, such as Sweden and Norway.
- **Alternating bi-valent system**
  For installations with an existing heating system by boiler and when is needed to heat the supplied water temperature to the circuit up to high temperatures (80°C), the boiler can be configured to alternate with the air to water heat pump.

Selecting the different configuration types it is possible to adapt the system to all customer requirements, providing a wide application range from the simplest configuration to complete configuration: radiator, heating floor or both (2nd temperature area).

Domestic hot water production

For **airH2O 800H** and Control Box, the Hitachi accessory “DHWT-(200/300)S-3.0H2E” can be used for the production of DHW.

In case of **airH2O 800H Combi**, the domestic hot water tank is built in the indoor unit.

An electric heater is incorporated inside both remote and integrated tanks in order to allow an immediate heating of the domestic hot water in accordance with the user’s needs.

Space cooling

airH2O 800 units can also be operated in cooling operation. The dedicated cooling kit accessory has been designed for this purpose. Combining the heating only models with these cooling kits, the reversible models become available. In this case, combination with fan-coils, refreshing floor or both (2nd temperature area) can be applied.

Combination with solar panels

airH2O 800 system can be combined with solar panels. The solar combination enables to heat up the DHW by means of the sun. The solar combination is designed to transfer the heat from the solar panels (sun radiation) to the heat exchanger of DHW tank.

Swimming pool water heating operation

For summer session period, **airH2O 800** system can be used to heat up the water temperature of swimming pools up to a value between 24°C and 33°C.

1.2 Applied symbols

During normal heat pump system design work or unit installation, greater attention must be paid in certain situations requiring particular care in order to avoid damage to the unit, the installation or the building or property.

Situations that pose a risk to the safety of those in the surrounding area or to the unit itself are clearly indicated in this manual.

A series of special symbols are used to clearly identify these situations.

Pay close attention to these symbols and to the messages following them, as your safety and that of others depends on it.



RISK OF EXPLOSION:
This symbol shows that this equipment uses an odourless flammable refrigerant. This appliance is filled with R290. If the refrigerant is leaked, there is a possibility of ignition if it enters in contact with an external ignition source.

DANGER

- ***The text following this symbol contains information and instructions relating directly to your safety, in addition to hazards or unsafe practices which could result in severe personal injuries or death.***
- ***Not taking these instructions into account could lead to serious, very serious or even fatal injuries to you and others.***

In the texts following the danger symbol you can also find information on safety procedures during unit installation.

CAUTION

- *The text following this symbol contains information and instructions relating directly to your safety, in addition to hazards or unsafe practices which could result in minor personal injury or product or property damage.*
- *Not taking these instructions into account could lead to minor injuries to you and others in the proximities of the unit.*
- *Not taking these instructions into account could lead to unit damage.*

In the texts following the caution symbol you can also find information on safety procedures during unit installation.

NOTE

- *The text following this symbol contains information or instructions that may be of use or that require a more thorough explanation.*
- *Instructions regarding inspections to be made on unit parts or systems may also be included.*

1.3 Norms and regulations

Refrigerant R290 is a non-fluorinated greenhouse gas (*) and an alternative refrigerant for the compliance of traditional HFC refrigerant bans foreseen in the EU regulation 2024/573 (F-Gas) in 2027 and 2032.

Do not vent R290 to the atmosphere. The refrigerant shall be recovered when needed for the system servicing and at the end of product life.

NOTE

(*) GWP_{290} = 0.02 under Intergovernmental Panel on Climate Change (IPCC) AR6.

1.3.1 Appropriate refrigerant

The refrigerant used in each unit is identified on the specification label and manuals of the unit. Hitachi shall not be held liable for any failure, trouble, malfunction or accident caused by units illegally charged with refrigerants other than the specified one.

1.3.2 Consequences of charging non-specified refrigerant

It may cause mechanical failure, malfunction and other accidents. It may cause operational failure of protection and safety devices of the system. It may also cause lubrication failure of the sliding part of the compressor due to deterioration of refrigerant oil.

Once a non-specified refrigerant has been charged, no further servicing (including draining of refrigerant) shall be performed, even in case of malfunction. Improper handling of refrigerant may be a cause of fire and explosion, and servicing in such cases may be considered an illegal act.

End clients and costumers shall be informed that servicing is not approved, and the installer who charged the non-specified refrigerant shall be asked to fix the unit.

Hitachi will accept no responsibility for units that have been charged with non-specified refrigerant once.

1.4 Classification and product guide

1.4.1 Classification of the units

1.4.1.1 Outdoor units

◆ airH2O 800M - RASM-(2-6)(V)TW2E

Unit type: **airH2O 800M** (Outdoor unit)
Position-separating hyphen (fixed)
System capacity (HP): 2, 3, 3.5, 4, 5, 6
V: Single phase unit (~ 230 V 50 Hz)
—: Three phase unit (3N~ 400 V 50 Hz)
R290 refrigerant
W: Hydrosplit system
Series 2
Made in Europe

RASM	-	X	(V)	T	W	2	E

1.4.1.2 Indoor units - Hydrosplit system

◆ airH2O 800H - HWM-W2E(-B)

Unit type: **airH2O 800H** (Hydrosplit system - single water module (indoor unit))
Position-separating hyphen (fixed)
W: Water to water
Series 2
Made in Europe
-B: Model for boiler combination

HWM	-	W	2	E	(-B)

◆ airH2O 800H Combi - HWD-W2E-220S(-K)

Unit type: **airH2O 800H Combi** (Hydrosplit system - dual water module (indoor unit + domestic hot water tank))
Position-separating hyphen (fixed)
Water-to-water DHW heat exchanger
Series 2
Made in Europe
Position-separating hyphen (fixed)
Tank model: 220 litres
Tank material: Stainless steel
-K: Model for UK market

HWD	-	W	2	E	-	220	S	(-K)

1.4.1.3 Indoor units - Control Box system

◆ Control Box - ATW-CBX-01

Air-to-water				
	Position-separating hyphen (fixed)			
		Remote control box		
			Position-separating hyphen (fixed)	
				Series 01
ATW	**-**	**CBX**	**-**	**01**

1.4.2 Product guide

Icons between brackets mean possible extra operations to the factory-supplied operations (additional accessories, field-supplied accessories or systems can be needed).

- Heating operation
- Additional heater (electrical heater accessory)
- Domestic Hot Water (DHW)
- UK market
- Swimming pool application
- Cooling operation
- Solar combination
- Boiler combination
- Integrated Wi-Fi

1.4.2.1 Outdoor units

◆ airH2O 800M - RASM-(2-6)(V)TW2E

Model	Power supply	Model code	Remarks	Picture
RASM-2VTW2E	~ 230 V 50 Hz	7E355003	Monobloc air-to-water heat pump system	
RASM-3VTW2E		7E355005		
RASM-3.5VTW2E		7E355006		
RASM-4VTW2E		7E355007		
RASM-5VTW2E		7E355008		
RASM-6VTW2E		7E355009		
RASM-4TW2E	3N~ 400 V 50 Hz	7E355107		
RASM-5TW2E		7E355108		
RASM-6TW2E		7E355109		

For cooling operation, refer to the cooling kit accessory.

1.4.2.2 Indoor units - Hydrosplit system

◆ airH2O 800H - HWM-W2E(-B)

Standard model

Model	Power supply	Model code	Remarks	Picture
HWM-W2E	~ 230 V 50 Hz 3N~ 400 V 50 Hz	7E545902	Wall mounted indoor units for Hydrosplit air-to-water heat pump system with electrical heater (6 kW)	

Model for boiler combination

Model	Power supply	Model code	Remarks	Picture
HWM-W2E-B	~ 230 V 50 Hz	7E545905	Wall mounted indoor units for Hydrosplit air-to-water heat pump system for boiler combination	

◆ airH2O 800H Combi - HWD-W2E-220S(-K)

Standard model

Model	Power supply	Model code	Remarks	Picture
HWD-W2E-220S	~ 230 V 50 Hz 3N~ 400 V 50 Hz	7E545903	Floor standing indoor units with integrated 220 L DHW tank for Hydrosplit air-to-water heat pump system	

Model for UK market

Model	Power supply	Model code	Remarks	Picture
HWD-W2E-220S-K	~ 230 V 50 Hz 3N~ 400 V 50 Hz	7E545904	Floor standing indoor units with integrated 220 L DHW tank (UK version) for Hydrosplit air-to-water heat pump system	

1.4.2.3 Indoor units - Control Box system

◆ Control Box - ATW-CBX-01

Model	Power supply	Model code	Remarks	Picture
ATW-CBX-01	~ 230 V 50 Hz 3N~ 400 V 50 Hz	7E599971	Control box for combination with **airH2O 800M**	

1.4.2.4 Indoor units - Complementary system

Model	Unit reference
airH2O 800H (HWM-W2E(-B))	H
airH2O 800H Combi (HWD-W2E-220S(-K))	HC
Control Box (ATW-CBX-01)	CBX

◆ Cascade Controller - ATW-YCC-04

Model	Compatible units	Model code	Remarks	Picture
ATW-YCC-04	H, HC, CBX	7E549963	Cascade Controller New controller generation	

1.4.3 Accessory code list

Model	Unit reference
airH2O 800H (HWM-W2E(-B))	H
airH2O 800H Combi (HWD-W2E-220S(-K))	HC
Control Box (ATW-CBX-01)	CBX
Cascade Controller (ATW-YCC-04)	YCC
All models	A

1.4.3.1 Cooling kit accessories

Accessory	Applicable models	Name	Code	Figure
ATW-CKSC-02	HC	Cooling operation kit for **airH2O 800H Combi** - Insulations + Jumper	7E549959	
ATW-CKSC-03	HC	Cooling operation kit for **airH2O 800H Combi** - Insulations + Jumper + Drain Pump	7E549960	
ATW-CKS-04	H	Cooling operation kit for **airH2O 800H**	7E549974	

1.4.3.2 Control accessories

Accessory	Applicable models	Name	Code	Figure
PC-ARFH3E	H, HC, CBX	Unit controller Wired room thermostat for **airH2O 800** units	7E543026	
PC-ARFH3EB	H, HC, CBX	Unit controller Wired room thermostat for **airH2O 800** units (black version)	7E543027	
PC-ARCHE	H, HC, CBX	Compact wired thermostat	7E543022	

Accessory	Applicable models	Name	Code	Figure
PC-ARFH1E1	A	Wired room thermostat (Languages EN, ES, DE, FR, IT, NL, SL)	7E543019	
PC-ARFH1E1-02	A	Wired room thermostat (Languages EN, DA, SV, FI, PT, HR, EL)	7E543020	
PC-ARFH1E1-03	A	Wired room thermostat (Languages EN, PL, UK, HU, RO, SL, CS)	7E543021	
ATW-RTU-04	A	Wireless ON/OFF thermostat (Receiver + Room thermostat)	7E543003	
ATW-RTU-06	A	Wireless Intelligent thermostat for 2nd circuit (Only Room thermostat. For Intelligent thermostat application). Can be combined with ATW-RTU-07.	7E543005	
ATW-RTU-07	A	Wireless Intelligent thermostat (Receiver + Room thermostat)	7E543015	
ATW-KNX-02	H, HC, CBX	KNX interface for **airH2O 800** units	7E549925	
ATW-AOS-02	H, HC, CBX	Auxiliary output signal box (Relay board for additional output signals)	7E549935	
HC-A16MB	A	MODBUS gateway for multi **airH2O 800** systems (up to 8 **airH2O 800** units max., with Cascade Controller 2 units max. or without Cascade Controller)	7E513210	

Accessory	Applicable models	Name	Code	Figure
ATW-MBS-02	H, HC, CBX	MODBUS gateway for single **airH2O 800** system	7E549924	
ATW-FCP-03	H, HC	Unit controller cover	7E549964	
ATW-EC-01	A	Extension cord for gateway Wifi ATW-IOT-02 (10 meters)	7E549973	

1.4.3.3 Temperature sensor accessories

Accessory	Applicable models	Name	Code	Figure
ATW-ITS-01	H, HC, CBX	Indoor wired room temperature sensor	7E549932	
ATW-WTS-02Y	H, HC, CBX	Universal water temperature sensor	9E500004	

1.4.3.4 Water circuit accessories

Accessory	Applicable models	Name	Code	Figure
ATW-2TK-07	H, HC, CBX	2nd zone mixing kit (wall mounted model)	7E549951	
ATW-2TK-08	HC	2nd zone mixing kit (integrable in **airH2O 800H Combi**)	7E549965	
ATW-CP-05	HC	Active anode (cathodic protection)	7E549954	

Accessory	Applicable models	Name	Code	Figure
DHWT-200S-3.0H2E	H, CBX	Domestic hot water tank (200 L)	70544002	
DHWT-300S-3.0H2E	H, CBX	Domestic hot water tank (300 L)	70544003	
ATW-HSK-01	H, HC, CBX	Hydraulic separator	7E549905	
ATW-AQT-01	H, HC, CBX	Aquastat security	7E549907	
ATW-3WV-01	H, HC, CBX	3-way valve (internal thread and spring return)	7E549906	
ATW-WCV-01	H, HC, CBX	Water check valve	9E500014	
WEH-6E	CBX	Water electric heater	90500002	
ATW-DPOV-01	H, HC, CBX	Differential pressure overflow valve	7E549916	

1.4.3.5 Outdoor unit accessories

Accessory	Name	Code	Figure
DBS-26	Drain discharge connection	60299192	
ATW-DH0-01	Drain heater	7E549975	

General data

2.1 Capacity tables....19
2.1.1 Nominal capacity-performance tables....19
2.1.1.1 Considerations....19
2.1.1.2 Capacity-performance data....20
2.2 ERP performance data....21
2.2.1 General considerations....21
2.2.2 General ERP data for space heaters....22
2.2.2.1 ERP data....22
2.2.2.2 ERP additional data....23
2.2.3 General ERP data for combi heaters....24
2.2.4 General ERP data for hot water storage tanks....24
2.3 Cooling data (EN 14825)....25
2.4 General specifications....26
2.4.1 Considerations....26
2.4.2 Outdoor units....27
2.4.3 Indoor units- Hydrosplit system....28
2.4.4 Domestic hot water tank....30
2.4.5 Indoor units- Control Box system....31
2.4.6 Indoor units- Complementary system....31
2.5 Component data....32
2.5.1 Outdoor units....32
2.5.2 Indoor units- Hydrosplit system....34
2.6 Electrical data....37

2.6.1 Considerations 37
2.6.2 Outdoor units 38
2.6.3 Indoor units- Hydrosplit system 38
2.6.4 Indoor units- Control Box system 39
2.6.5 Indoor units- Complementary system 39

2.1 Capacity tables

2.1.1 Nominal capacity-performance tables

2.1.1.1 Considerations

- The heating capacity tables show the capacity and performance data in integrated values (with defrost correction factor obtained from tests at humidity setting described on EN 14825).
- The nominal heating and cooling capacities are based on the EN 14511 standard.
- DHW performance based on the EN 16147.

Keywords:

- ✓ CAP: Nominal capacity (kW)
- ✓ COP: Coefficient of performance
- ✓ EER: Energy efficiency ratio
- ✓ DB: Dry bulb (°C)
- ✓ WB: Wet bulb (°C)
- ✓ OAT: Outdoor ambient temperature (°C)
- ✓ WIT: Water inlet temperature (°C)
- ✓ WOT: Water outlet temperature (°C)

2.1.1.2 Capacity-performance data

◆ airH2O 800M + airH2O 800H / airH2O 800H Combi / Control Box

		HP		2.0 HP	3.0 HP	3.5 HP	4.0 HP	5.0 HP	6.0 HP
		Outdoor unit		RASM-2VTW2E	RASM-3VTW2E	RASM-3.5VTW2E	RASM-4(V)TW2E	RASM-5(V)TW2E	RASM-6(V)TW2E
		Indoor unit		HWM-W2E(-B) / HWD-W2E-220S(-K) / ATW-CBX-01					
OAT (DB/WB)	WIT / WOT	-	Unit	Heating operation					
7 / 6°C	30 / 35°C	CAP (Min./Nom./Max.)	kW	2.40 / 4.00 / 6.00	2.40 / 6.00 / 8.00	2.40 / 8.00 / 10.00	4.50 / 10.00 / 12.00	4.50 / 12.00 / 14.00	4.50 / 14.00 / 16.00
		COP (Nominal)	-	4.70	4.84	4.62	4.53	4.21	4.20
	47 / 55°C	CAP (Nom./Max.)	kW	4.00 / 6.00	6.00 / 8.00	8.00 / 9.00	10.00 / 12.00	12.00 / 14.00	14.00 / 16.00
		COP (Nominal)	-	3.00	3.10	2.93	3.40	3.30	2.76
2 / 1°C	30 / 35°C	CAP (Nom./Max.)	kW	4.00 / 4.50	6.00 / 6.50	8.00 / 8.00	10.00 / 10.00	12.00 / 13.00	14.00 / 14.50
		COP (Nominal)	-	3.65	3.45	2.84	3.47	3.20	3.02
	47 / 55°C	CAP (Nom./Max.)	kW	4.00 / 4.50	6.00 / 6.00	7.50 / 7.50	10.00 / 10.00	12.00 / 12.00	13.00 / 13.00
		COP (Nominal)	-	2.37	2.42	2.16	2.45	2.25	2.10
-7 / -8°C	30 / 35°C	CAP (Nom./Max.)	kW	4.00 / 4.50	6.00 / 6.00	8.00 / 8.00	10.00 / 10.00	12.00 / 12.00	13.00 / 13.50
		COP (Nominal)	-	2.81	2.92	2.65	2.78	2.56	2.43
	47 / 55°C	CAP (Nom./Max.)	kW	4.00 / 4.50	6.00 / 6.00	7.50 / 7.50	10.00 / 10.00	12.00 / 12.00	13.00 / 13.00
		COP (Nominal)	-	2.00	2.05	2.02	2.15	2.03	1.91
OAT (DB/WB)	WIT / WOT	-	Unit	Cooling operation (using cooling kit accessory)					
35 / --°C	12 / 7°C	CAP (Nom./Max.)	kW	4.00 / 4.50	6.00 / 6.50	7.00 / 7.50	10.00 / 10.00	11.00 / 11.00	12.00 / 12.00
		EER (Nominal)	-	2.78	2.91	2.84	3.13	2.94	2.66
	23 / 18°C	CAP (Nom./Max.)	kW	4.00 / 4.50	6.00 / 7.50	8.00 / 8.50	10.00 / 10.00	12.00 / 12.00	14.00 / 14.00
		EER (Nominal)	-	4.34	4.26	3.77	3.35	3.64	3.35

**: The test is performed with the fixed flow rate or with the ΔT obtained during the test at the corresponding standard rating conditions for units with variable flow rate.*

2.2 ERP performance data

2.2.1 General considerations

- This appliance must be installed, maintained and dismantled by professionals. Do not pour contained refrigerant into the atmosphere.
- Data with the mark (*) corresponds to the “Energy efficiency contribution (η_s)” due to the use of temperature control.
- **Data between brackets corresponds only to heating and cooling models (“Cooling kit” accessory needed).**

OTC control (Factory-supplied)		Wired room thermostat (PC-ARFH3E)	7E543026 (**)
		Wired room sensor (ATW-ITS-01)	7E549932
		Wireless room thermostat (ATW-RTU-07)	7E543015
		Delta Dore gateway (ATW-TYD-01)	-
Temperature control class	II	Temperature control class	VI
Energy efficiency contribution	+2%	Energy efficiency contribution	+4%

NOTE

(**) Factory supplied.

2.2.2 General ERP data for space heaters

2.2.2.1 ERP data

◆ airH2O 800M + airH2O 800H / airH2O 800H Combi / Control Box

AVERAGE climate

	HP			2.0 HP		3.0 HP		3.5 HP		4.0 HP		5.0 HP		6.0 HP	
	Outdoor unit			RASM-2VTW2E		RASM-3VTW2E		RASM-3.5VTW2E		RASM-4(V)TW2E		RASM-5(V)TW2E		RASM-6(V)TW2E	
	Indoor unit			HWM-W2E(-B) / HWD-W2E-220S(-K) / ATW-CBX-01											
	Water outlet temperature			35°C	55°C	35°C	55°C	35°C	55°C	35°C	55°C	35°C	55°C	35°C	55°C
Product description	Air to water heat pump		-	Yes	Yes	Yes	Yes	Yes	Yes	Yes	Yes	Yes	Yes	Yes	Yes
	Heat pump combination heater		-	No	No	No	No	No	No	No	No	No	No	No	No
	Low temperature heat pump		-	No	No	No	No	No	No	No	No	No	No	No	No
	Complementary heater		-	Yes (not for Control Box)											
Design capacity (P_{DESIGN})			kW	4	4	6	6	8	8	10	10	12	12	13	14
Nominal energy efficiency (η_s)			%	177 (182)	127 (130)	184 (187)	132 (133)	184 (186)	135 (136)	178 (180)	143 (144)	178 (180)	139 (140)	179 (180)	131 (132)
SCOP			-	4.50 (4.62)	3.25	4.67 (4.76)	3.37 (3.41)	4.67 (4.74)	3.44 (3.48)	4.53 (4.58)	3.65 (3.68)	4.53 (4.57)	3.55 (3.58)	4.54 (4.58)	3.35 (3.36)
Nominal energy class			-	A+++	A++	A+++	A++	A+++	A++	A+++	A++	A+++	A++	A+++	A++
Data for Packaged Fiche	Energy efficiency with OTC control (η_s) (*)		%	179 (184)	129 (132)	186 (189)	134 (135)	186 (188)	137 (138)	180 (182)	145 (146)	180 (182)	141 (142)	181 (182)	133 (134)
	Energy class with OTC control		-	A+++	A++	A+++	A++	A+++	A++	A+++	A++	A+++	A++	A+++	A++
	Energy efficiency with thermostats/sensors (η_s) (*)		%	181 (186)	131 (134)	188 (191)	136 (137)	188 (190)	139 (140)	182 (184)	147 (148)	182 (184)	143 (144)	183 (184)	135 (136)
	Energy class with thermostats		-	A+++	A++	A+++	A++	A+++	A++	A+++	A++	A+++	A++	A+++	A++
Supplementary capacity (P_{SUP})			kW	0.0	0.0	0.0	0.0	1.0	1.0	1.2	1.2	1.9	1.1	2.9	3.1
Type of energy used			-	Electricity		Electricity		Electricity		Electricity		Electricity		Electricity	
Declared capacity (Pdh) and coefficient of performance (COP_d) at partial load under the following outdoor temperatures	Outdoor temperature (Tj) = -7°C	Pdh	kW	3.5	3.5	5.3	5.3	7.0	7.0	8.9	8.9	10.6	10.6	10.9	11.9
		COP_d	-	2.64	2.18	2.91	2.20	2.91	2.20	2.87	2.29	2.85	2.17	2.85	2.00
	Outdoor temperature (Tj) = +2°C	Pdh	kW	2.2	2.2	3.2	3.2	4.3	4.3	5.4	5.4	6.5	6.5	6.6	7.5
		COP_d	-	4.66	3.12	4.53	3.14	4.39	3.19	4.30	3.47	4.25	3.30	4.25	2.99
	Outdoor temperature (Tj) = +7°C	Pdh	kW	2.8	2.9	2.8	2.9	2.8	2.9	5.0	5.0	5.0	5.0	5.0	5.0
		COP_d	-	6.89	4.94	6.89	4.94	6.89	4.94	6.73	5.37	6.73	5.37	6.73	5.37
	Outdoor temperature (Tj) = +12°C	Pdh	kW	2.8	2.8	2.8	2.8	2.8	2.8	5.4	5.0	5.4	5.0	5.4	5.0
		COP_d	-	9.27	7.28	9.27	7.28	9.27	7.28	9.21	7.69	9.21	7.69	9.21	7.69
	Outdoor temperature (Tj) = Bivalent temperature (T_{biv})	Pdh	kW	3.5	3.5	5.3	5.3	7.0	7.0	8.9	8.9	10.6	10.6	10.9	11.9
		COP_d	-	2.64	2.18	2.91	2.20	2.91	2.20	2.87	2.29	2.85	2.17	2.85	2.00
	Outdoor temperature (Tj) = Limit operation temperature (TOL)	Pdh	kW	3.5	3.5	5.3	5.3	7.0	7.0	8.9	8.9	10.1	10.9	10.2	10.9
		COP_d	-	2.52	1.86	2.89	1.86	2.56	1.92	2.82	2.03	2.57	1.75	2.57	1.75
Bivalent temperature (T_{biv})			°C	-7	-7	-7	-7	-7	-7	-7	-7	-7	-7	-7	-7
Limit operation temperature (TOL)			°C	-10	-10	-10	-10	-10	-10	-10	-10	-10	-10	-10	-10
Water limit operation temperature (WTOL)			°C	75	75	75	75	75	75	75	75	75	75	75	75
Degradation coefficient (Cdh)			-	0.9	0.9	0.9	0.9	0.9	0.9	0.9	0.9	0.9	0.9	0.9	0.9
Annual energy consumption (Q_{HE})			kW·h	1836 (1788)	2539 (2492)	2654 (2607)	3682 (3635)	3537 (3489)	4800 (4750)	4561 (4513)	5659 (5611)	5472 (5424)	6979 (6932)	5918 (5870)	8646 (8598)

WARMER climate

		HP	2.0 HP	3.0 HP	3.5 HP	4.0 HP	5.0 HP	6.0 HP
		Outdoor unit	RASM-2VTW2E	RASM-3VTW2E	RASM-3.5VTW2E	RASM-4(V)TW2E	RASM-5(V)TW2E	RASM-6(V)TW2E
		Indoor unit	HWM-W2E(-B) / HWD-W2E-220S(-K) / ATW-CBX-01					
		Water outlet temperature	55°C	55°C	55°C	55°C	55°C	55°C
Design capacity (P_{DESIGN})		kW	4	6	8	10	12	14
Nominal energy efficiency (η_s)		%	150 (157)	163 (168)	171 (175)	181 (185)	188 (191)	192 (195)
SCOP		-	3.83 (3.99)	4.15 (4.28)	4.35 (4.45)	4.61 (4.70)	4.78 (4.86)	4.88 (4.96)
Data for packaged fiche	Energy efficiency with OTC control (η_s) (*)	%	152 (159)	165 (170)	173 (177)	183 (187)	190 (193)	194 (197)
	Energy efficiency with thermostats (η_s) (*)	%	154 (161)	167 (172)	175 (179)	185 (189)	192 (195)	196 (199)
Annual energy consumption (Q_{HE})		kW·h	1396 (1338)	1929 (1872)	2457 (2400)	2899 (2841)	3355 (3298)	3829 (3772)

COLDER climate

		HP	2.0 HP	3.0 HP	3.5 HP	4.0 HP	5.0 HP	6.0 HP
		Outdoor unit	RASM-2VTW2E	RASM-3VTW2E	RASM-3.5VTW2E	RASM-4(V)TW2E	RASM-5(V)TW2E	RASM-6(V)TW2E
		Indoor unit	HWM-W2E(-B) / HWD-W2E-220S(-K) / ATW-CBX-01					
		Water outlet temperature	55°C	55°C	55°C	55°C	55°C	55°C
Design capacity (P_{DESIGN})		kW	4	6	8	10	12	14
Nominal energy efficiency (η_s)		%	105 (106)	109 (110)	110 (110)	129	129 (129)	126 (126)
SCOP		-	2.70 (2.72)	2.81 (2.83)	2.82 (2.83)	3.29	3.30 (3.31)	3.22 (3.23)
Data for packaged fiche	Energy efficiency with OTC control (η_s) (*)	%	107 (108)	111 (112)	112 (112)	131	131 (131)	128 (128)
	Energy efficiency with thermostats (η_s) (*)	%	109 (110)	113 (114)	114 (114)	133	133 (133)	130 (130)
Annual energy consumption (Q_{HE})		kW·h	3657 (3628)	5259 (5230)	6995 (6967)	7483	8977 (8949)	10728 (10700)

2.2.2.2 ERP additional data

◆ airH2O 800M + airH2O 800H / airH2O 800H Combi / Control Box

	HP	2.0 HP	3.0 HP	3.5 HP	4.0 HP	5.0 HP	6.0 HP
	Outdoor unit	RASM-2VTW2E	RASM-3VTW2E	RASM-3.5VTW2E	RASM-4(V)TW2E	RASM-5(V)TW2E	RASM-6(V)TW2E
	Indoor unit	HWM-W2E(-B) / HWD-W2E-220S(-K) / ATW-CBX-01					
Electrical power input in stand-by mode (Psb)	W	13	13	13	13	13	13
Electrical power input in thermostat-OFF mode (Pto)	W	13	13	13	13	13	13
Electrical power input in OFF mode (Poff)	W	13	13	13	13	13	13
Electrical power input in crankcase heater mode (Pck)	W	0	0	0	0	0	0
Sound power level of indoor unit (Lwa. not applicable to ATW-CBX-01)	dB(A)	41	41	41	41	41	41
Sound power level of outdoor unit (Lwa)	dB(A)	55	56	57	53	53	53
Capacity control mode	-	Variable (Inverter)	Variable (Inverter)	Variable (Inverter)	Variable (Inverter)	Variable (Inverter)	Variable (Inverter)
Integrated supplementary heater (not applicable to ATW-CBX-01 or HWM-W2E-B)	kW	6	6	6	6	6	6
Nominal outdoor air flow	m^3/h	2400	2700	3500	4800	5400	6000

2.2.3 General ERP data for combi heaters

◆ airH2O 800M + airH2O 800H Combi

	HP	2.0 HP	3.0 HP	3.5 HP	4.0 HP	5.0 HP	6.0 HP
	Outdoor unit	RASM-2VTW2E	RASM-3VTW2E	RASM-3.5VTW2E	RASM-4(V)TW2E	RASM-5(V)TW2E	RASM-6(V)TW2E
	Indoor unit	HWD-W2E-220S(-K)					
Declared profile	-	L	L	L	L	L	L
Ability to work during OFF peak hours	-	Yes	Yes	Yes	Yes	Yes	Yes
	AVERAGE climate						
COPdhw (SCOPdhw)	-	3.19	3.19	3.19	3.00	3.00	3.00
Water heating energy efficiency (η_{wh})	%	130	130	130	123	123	123
Heating up time (t_h)	h:min	1:36	1:36	1:36	1:30	1:30	1:30
Standby power input (Pes)	W	35	35	35	41	41	41
Mixed water at 40°C (Vmax)	l	288	288	288	288	288	288
Ref hot water temperature (θ'wh)	°C	52.00	52.00	52.00	52.00	52.00	52.00
Water heating energy class	-	A+	A+	A+	A+	A+	A+
Daily energy consumption	kW·h	2.15	2.15	2.15	2.28	2.28	2.28
Annual energy consumption	kW·h	785	785	785	833	833	833
	WARMER climate						
COPdhw (SCOPdhw)	-	3.45	3.45	3.45	3.30	3.30	3.30
Water heating energy efficiency (η_{wh})	%	141	141	141	135	135	135
Daily energy consumption	kW·h	1.99	1.99	1.99	2.07	2.07	2.07
Annual energy consumption	kW·h	726	726	726	755	755	755
	COLDER climate						
COPdhw (SCOPdhw)	-	2.90	2.90	2.90	2.70	2.70	2.70
Water heating energy efficiency (η_{wh})	%	118	118	118	110	110	110
Daily energy consumption	kW·h	2.37	2.37	2.37	2.54	2.54	2.54
Annual energy consumption	kW·h	867	867	867	928	928	928

2.2.4 General ERP data for hot water storage tanks

Model		DHWT-200S-3.0H2E	DHWT-300S-3.0H2E
Storage volume	L	194	264
Standing loss	W	47.3	62.8
Energy efficiency class	-	B	B

2.3 Cooling data (EN 14825)

For those models with cooling kit accessory.

◆ airH2O 800M + airH2O 800H / airH2O 800H Combi / Control Box

	Outdoor unit			RASM-2VTW2E		RASM-3VTW2E		RASM-3.5VTW2E		RASM-4(V)TW2E		RASM-5(V)TW2E		RASM-6(V)TW2E	
	Indoor unit			HWM-W2E(-B) /HWD-W2E-220S(-K) / ATW-CBX-01											
	Water outlet temperature			7°C	18°C	7°C	18°C	7°C	18°C	7°C	18°C	7°C	18°C	7°C	18°C
Product description	Outdoor side heat exchanger of chiller		-	Air to Water		Air to Water		Air to Water		Air to Water		Air to Water		Air to Water	
	Indoor side heat exchanger chiller		-	Water		Water		Water		Water		Water		Water	
	Type		-	Compressor driven Vapour compression		Compressor driven Vapour compression		Compressor driven Vapour compression		Compressor driven Vapour compression		Compressor driven Vapour compression		Compressor driven Vapour compression	
	Driver of compressor		-	Electric motor		Electric motor		Electric motor		Electric motor		Electric motor		Electric motor	
	Capacity control		-	Variable		Variable		Variable		Variable		Variable		Variable	
	Water control		-	Fixed		Fixed		Fixed		Fixed		Fixed		Fixed	
Rated Cooling Capacity (PRATED, C)			kW	4	4	6	6	7	8	10	10	11	12	12	14
Seasonal space cooling energy efficiency (ηS, C)			%	135	187	147	199	152	196	153	226	152	226	149	232
Seasonal energy efficiency ratio cooling mode (SEER)			-	3.45	4.76	3.75	5.05	3.88	4.98	3.90	5.73	3.88	5.72	3.80	5.86
Seasonal active energy ratio cooling mode (SEERON)			-	3.59	5.04	3.86	5.25	3.98	5.13	3.98	5.88	3.94	5.85	3.86	5.98
Declared cooling capacity and efficiency ratio for part load at given outdoor temperatures Tj	Outdoor temperature (Tj) = 35°C	Pdc	kW	4.0	4.0	6.0	6.0	7.0	8.0	10.0	10.0	11.0	12.0	12.0	14.0
		EERd	-	2.78	4.34	2.91	4.26	2.84	3.77	3.16	3.35	2.96	3.34	2.66	3.35
	Outdoor temperature (Tj) = 30°C	Pdc	kW	3.0	3.0	4.4	4.4	5.2	5.9	7.4	7.4	8.1	8.9	8.9	10.3
		EERd	-	3.42	4.8	3.79	4.77	3.75	4.43	3.81	5.48	3.81	5.39	3.74	5.54
	Outdoor temperature (Tj) = 25°C	Pdc	kW	2.8	2.8	2.8	2.8	3.5	3.8	4.2	4.7	5.2	5.6	5.6	6.6
		EERd	-	3.91	5.55	3.91	5.55	4.17	5.45	4.30	6.88	4.22	6.74	4.14	6.98
	Outdoor temperature (Tj) = 20°C	Pdc	kW	2.8	3.3	2.8	3.3	2.8	3.3	4.2	4.7	4.2	4.7	4.2	4.7
		EERd	-	4.74	6.57	4.74	6.57	4.74	6.57	4.34	6.78	4.34	6.76	4.34	6.78
Degradation coefficient (Cdc)			-	0.9	0.9	0.9	0.9	0.9	0.9	0.9	0.9	0.9	0.9	0.9	0.9
Annual energy consumption (QCE)			kW·h	696	504	960	713	1083	964	1537	1048	1703	1258	1892	1432

Additional cooling data

	HP		2.0 HP	3.0 HP	3.5 HP	4.0 HP	5.0 HP	6.0 HP
	Outdoor unit		RASM-2VTW2E	RASM-3VTW2E	RASM-3.5VTW2E	RASM-4(V)TW2E	RASM-5(V)TW2E	RASM-6(V)TW2E
	Indoor unit		HWM-W2E(-B) / HWD-W2E-220S(-K) / ATW-CBX-01					
Electrical power input in stand-by mode (Psb)		W	13	13	13	13	13	13
Electrical power input in thermostat-OFF mode (Pto)		W	0	0	0	0	0	0
Electrical power input in OFF mode (Poff)		W	13	13	13	13	13	13
Electrical power input in crankcase heater mode (Pck)		W	0	0	0	0	0	0
Sound power level of indoor unit (Lwa, not applicable to ATW-CBX-01)		dB(A)	41	41	41	41	41	41
Sound power level of outdoor unit (Lwa)		dB(A)	55	56	57	53	53	53
Capacity control mode		-	Variable (Inverter)	Variable (Inverter)	Variable (Inverter)	Variable (Inverter)	Variable (Inverter)	Variable (Inverter)
Nominal outdoor air flow		m^3/h	2400	2700	3500	4800	5400	6000

2.4 General specifications

2.4.1 Considerations

- The sound data is based on the following conditions:
  - ✓ Outdoor ambient temperature
    - ◉ Heating mode (DB/WB): 7/6°C
    - ◉ Cooling mode (Ta) : 35°C
  - ✓ Water inlet/outlet temperature
    - ◉ Heating mode: 30/35°C (mark: *1)
    - ◉ Cooling mode: 12/7°C (mark *2)
  - ✓ Distance of the unit from the measuring point: At 1 meter from the unit's front surface; 1.5 meter from floor level.
  - ✓ The sound pressure level is measured in an anechoic chamber, so reflected sound should be taken into consideration when installing the unit.
  - ✓ The sound power level is measured in a reverberant room, in accordance with the standard EN 12102. Used environment conditions are the same that specified in EN 14511 for performance test.
  - ✓ Sound power and sound pressure levels at part load condition are corresponding to night shift function with capacity ratio set at 40% .
- The nominal water flow rate is calculated under the following conditions:
  - ✓ Outdoor ambient temperature (DB/WB): 7/6°C.
  - ✓ Water inlet/outlet temperature: 30/35°C (mark: *1).
- *For specific details about data corresponding to the working range, please refer to the chapter "Working range".*

Keywords:

- ✓ DB: Dry bulb
- ✓ WB: Wet bulb

2.4.2 Outdoor units

◆ airH2O 800M - RASM-(2-6)(V)TW2E

		Outdoor unit		RASM-2VTW2E	RASM-3VTW2E	RASM-3.5VTW2E	RASM-4VTW2E	RASM-5VTW2E	RASM-6VTW2E	RASM-4TW2E	RASM-5TW2E	RASM-6TW2E
Power supply			-	~ 230 V 50 Hz	~ 230 V 50 Hz	~ 230 V 50 Hz	~ 230 V 50 Hz	~ 230 V 50 Hz	~ 230 V 50 Hz	3N~ 400 V 50 Hz	3N~ 400 V 50 Hz	3N~ 400 V 50 Hz
Noise level (sound power) - Nominal		(*1)	dB(A)	62	63	65	61	62	63	61	62	63
Noise level (sound power) - Part load		(*1)	dB(A)	55	56	57	53	53	53	53	53	53
Cooling noise level (sound power) - Nominal		(*2)	dB(A)	62	63	65	61	62	63	61	62	63
Heating noise level (sound pressure) - Nominal		(*1)	dB(A)	54	55	56	51	52	52	51	52	52
Heating noise level (sound pressure) - Part load		(*1)	dB(A)	41	42	42	42	41	42	42	41	42
Cooling noise level (sound pressure) - Nominal		(*2)	dB(A)	54	55	56	51	52	52	51	52	52
Cabinet	Material		-	Painted galvanised steel	Painted galvanised steel	Painted galvanised steel	Painted galvanised steel	Painted galvanised steel	Painted galvanised steel	Painted galvanised steel	Painted galvanised steel	Painted galvanised steel
	Colour		-	White (RAL 9016) & black (RAL 9011)	White (RAL 9016) & black (RAL 9011)	White (RAL 9016) & black (RAL 9011)	White (RAL 9016) & black (RAL 9011)	White (RAL 9016) & black (RAL 9011)	White (RAL 9016) & black (RAL 9011)	White (RAL 9016) & black (RAL 9011)	White (RAL 9016) & black (RAL 9011)	White (RAL 9016) & black (RAL 9011)
Unit dimensions	Height (with connections)		mm	800	800	800	1140	1140	1140	1140	1140	1140
	Width		mm	1220	1220	1220	1220	1220	1220	1220	1220	1220
	Depth		mm	430	430	430	430	430	430	430	430	430
Packaging dimensions	Height		mm	938	938	938	1278	1278	1278	1278	1278	1278
	Width		mm	1336	1336	1336	1336	1336	1336	1336	1336	1336
	Depth		mm	550	550	550	550	550	550	550	550	550
Packaging Volume			m^3	0.73	0.73	0.73	1	1	1	1	1	1
Packaging materials			-	Wood - Carton - Plastic	Wood - Carton - Plastic	Wood - Carton - Plastic	Wood - Carton - Plastic	Wood - Carton - Plastic	Wood - Carton - Plastic	Wood - Carton - Plastic	Wood - Carton - Plastic	Wood - Carton - Plastic
Net weight			kg	90	90	90	130	130	130	130	130	130
Gross weight			kg	105	105	105	155	155	155	155	155	155
Inlet/Outlet water pipes connection	Connection type		-	Screwed	Screwed	Screwed	Screwed	Screwed	Screwed	Screwed	Screwed	Screwed
	Shutdown valves		in.	2 x G 1" (male)	2 x G 1" (male)	2 x G 1" (male)	2 x G 1" (male)	2 x G 1" (male)	2 x G 1" (male)	2 x G 1" (male)	2 x G 1" (male)	2 x G 1" (male)
	Inlet pipe diameter		in.	G 1" (female)	G 1" (female)	G 1" (female)	G 1" (female)	G 1" (female)	G 1" (female)	G 1" (female)	G 1" (female)	G 1" (female)
	Outlet pipe diameter		in.	G 1" (female)	G 1" (female)	G 1" (female)	G 1" (female)	G 1" (female)	G 1" (female)	G 1" (female)	G 1" (female)	G 1" (female)
Working range (Heating)	Outdoor ambient temperature		°C (WB)	-25 / 25	-25 / 25	-25 / 25	-25 / 25	-25 / 25	-25 / 25	-25 / 25	-25 / 25	-25 / 25
	Outlet water temperature		°C	20 / 75	20 / 75	20 / 75	20 / 75	20 / 75	20 / 75	20 / 75	20 / 75	20 / 75
Working range (Cooling)	Outdoor ambient temperature		°C (DB)	10 / 46	10 / 46	10 / 46	10 / 46	10 / 46	10 / 46	10 / 46	10 / 46	10 / 46
	Outlet water temperature		°C	5 / 22	5 / 22	5 / 22	5 / 22	5 / 22	5 / 22	5 / 22	5 / 22	5 / 22
Working range (DHW)	Outdoor ambient temperature		°C (DB)	-25 / 43	-25 / 43	-25 / 43	-25 / 43	-25 / 43	-25 / 43	-25 / 43	-25 / 43	-25 / 43
	Tank water temperature		°C	30 / 70	30 / 70	30 / 70	30 / 70	30 / 70	30 / 70	30 / 70	30 / 70	30 / 70
Refrigerant type			-	R290	R290	R290	R290	R290	R290	R290	R290	R290
Refrigerant charge amount before shipment			kg	0.9	0.9	0.9	1.2	1.2	1.2	1.2	1.2	1.2
Compressor type			-	Rotary DC Inverter driven	Rotary DC Inverter driven	Rotary DC Inverter driven	Rotary DC Inverter driven	Rotary DC Inverter driven	Rotary DC Inverter driven	Rotary DC Inverter driven	Rotary DC Inverter driven	Rotary DC Inverter driven

2.4.3 Indoor units - Hydrosplit system

◆ airH2O 800H - HWM-W2E(-B)

	HP		2.0 HP	3.0 HP	3.5 HP	4.0 HP	5.0 HP	6.0 HP
	Outdoor unit		RASM-2VTW2E	RASM-3VTW2E	RASM-3.5VTW2E	RASM-4(V)TW2E	RASM-5(V)TW2E	RASM-6(V)TW2E
	Indoor unit		HWM-W2E(-B)					
Power supply		-	~ 230 V 50 Hz / 3N~ 400 V 50 Hz					
Noise level (sound power)		dB(A)	41					
Nominal water flow rate	WIT: 30°C / WOT: 35°C ΔT: 5°C	m³/h	0.7	1.0	1.4	1.7	2.1	2.4
Minimum water flow rate		m³/h	0.6	0.6	0.6	0.6	0.6	0.6
Maximum water flow rate		m³/h	2	2	2	3	3	3
Cabinet	Material	-	Precoated galvanised steel	Precoated galvanised steel	Precoated galvanised steel	Precoated galvanised steel	Precoated galvanised steel	Precoated galvanised steel
	Colour	-	Pure white (RAL 9010)	Pure white (RAL 9010)	Pure white (RAL 9010)	Pure white (RAL 9010)	Pure white (RAL 9010)	Pure white (RAL 9010)
Unit dimensions	Height (with connections)	mm	890 (1010)	890 (1010)	890 (1010)	890 (1010)	890 (1010)	890 (1010)
	Width	mm	520	520	520	520	520	520
	Depth	mm	370	370	370	370	370	370
Packaging dimensions	Height	mm	1120	1120	1120	1120	1120	1120
	Width	mm	554	554	554	554	554	554
	Depth	mm	610	610	610	610	610	610
Packaging volume		m³	0.38	0.38	0.38	0.38	0.38	0.38
Packaging materials		-	Wood - Carton - Plastic	Wood - Carton - Plastic	Wood - Carton - Plastic	Wood - Carton - Plastic	Wood - Carton - Plastic	Wood - Carton - Plastic
Net weight (HWM-W2E / HWM-W2E-B)		kg	45 / 43	45 / 43	45 / 43	45 / 43	45 / 43	45 / 43
Gross weight (HWM-W2E / HWM-W2E-B)		kg	59 / 58	59 / 58	59 / 58	59 / 58	59 / 58	59 / 58
Water pipes connection	Connection type	-	Screwed connection	Screwed connection	Screwed connection	Screwed connection	Screwed connection	Screwed connection
	Shutdown valves	in.	2 x G 1” (male)	2 x G 1” (male)	2 x G 1” (male)	2 x G 1” (male)	2 x G 1” (male)	2 x G 1” (male)
	Inlet pipe diameter	in.	G 1” (female)	G 1” (female)	G 1” (female)	G 1” (female)	G 1” (female)	G 1” (female)
	Outlet pipe diameter	in.	G 1” (female)	G 1” (female)	G 1” (female)	G 1” (female)	G 1” (female)	G 1” (female)

◆ airH2O 800H Combi - HWD-W2E-220S(-K)

	HP		2.0 HP	3.0 HP	3.5 HP	4.0 HP	5.0 HP	6.0 HP
	Outdoor unit		RASM-2VTW2E	RASM-3VTW2E	RASM-3.5VTW2E	RASM-4(V)TW2E	RASM-5(V)TW2E	RASM-6(V)TW2E
	Indoor unit		HWD-W2E-220S(-K)					
Power supply		-	~ 230 V 50 Hz / 3N~ 400 V 50 Hz					
Noise level (sound power)		dB(A)	41					
Nominal water flow rate	WIT: 30°C / WOT: 35°C ΔT: 5°C	m³/h	0.7	1.0	1.4	1.7	2.1	2.4
Minimum water flow rate		m³/h	0.6	0.6	0.6	0.6	0.6	0.6
Maximum water flow rate		m³/h	2	2	2	3	3	3
Cabinet	Material	-	Precoated galvanised steel	Precoated galvanised steel	Precoated galvanised steel	Precoated galvanised steel	Precoated galvanised steel	Precoated galvanised steel
	Colour	-	Pure white (RAL 9010)	Pure white (RAL 9010)	Pure white (RAL 9010)	Pure white (RAL 9010)	Pure white (RAL 9010)	Pure white (RAL 9010)
Unit dimensions	Height (with connections)	mm	1793 (1894)	1793 (1894)	1793 (1894)	1793 (1894)	1793 (1894)	1793 (1894)
	Width	mm	595	595	595	595	595	595
	Depth	mm	590	590	590	590	590	590
Packaging dimensions	Height	mm	2020	2020	2020	2020	2020	2020
	Width	mm	670	670	670	670	670	670
	Depth	mm	655	655	655	655	655	655
Packaging volume		m³	0.90	0.90	0.90	0.90	0.90	0.90
Packaging materials		-	Wood - Carton - Plastic	Wood - Carton - Plastic	Wood - Carton - Plastic	Wood - Carton - Plastic	Wood - Carton - Plastic	Wood - Carton - Plastic
Net weight		kg	113	113	113	113	113	113
Gross weight		kg	124	124	124	124	124	124
Outdoor pipes connection	Connection type	-	Screwed connection	Screwed connection	Screwed connection	Screwed connection	Screwed connection	Screwed connection
	Shut-off valves	in.	2 x G 1" (male)	2 x G 1" (male)	2 x G 1" (male)	2 x G 1" (male)	2 x G 1" (male)	2 x G 1" (male)
	Inlet pipe diameter	in.	G 1" (female)	G 1" (female)	G 1" (female)	G 1" (female)	G 1" (female)	G 1" (female)
	Outlet pipe diameter	in.	G 1" (female)	G 1" (female)	G 1" (female)	G 1" (female)	G 1" (female)	G 1" (female)
Space heating / cooling pipes connection	Connection type	-	Screwed connection	Screwed connection	Screwed connection	Screwed connection	Screwed connection	Screwed connection
	Shut-off valves	in.	2 x G 1" (male)	2 x G 1" (male)	2 x G 1" (male)	2 x G 1" (male)	2 x G 1" (male)	2 x G 1" (male)
	Inlet pipe diameter	in.	G 1" (female)	G 1" (female)	G 1" (female)	G 1" (female)	G 1" (female)	G 1" (female)
	Outlet pipe diameter	in.	G 1" (female)	G 1" (female)	G 1" (female)	G 1" (female)	G 1" (female)	G 1" (female)
DHW pipes connection	Connection type	-	Screwed connection	Screwed connection	Screwed connection	Screwed connection	Screwed connection	Screwed connection
	Inlet pipe diameter	in.	G 3/4" (female)	G 3/4" (female)	G 3/4" (female)	G 3/4" (female)	G 3/4" (female)	G 3/4" (female)
	Outlet pipe diameter	in.	G 3/4" (female)	G 3/4" (female)	G 3/4" (female)	G 3/4" (female)	G 3/4" (female)	G 3/4" (female)

2.4.4 Domestic hot water tank

			Model	DHWT-200S-3.0H2E	DHWT-300S-3.0H2E
Casing	Color		-	White	White
	Material		-	Polypropylene jacked	Polypropylene jacked
Dimensions	Packing	Height	mm	1300	1880
		Width	mm	600	600
		Depth	mm	600	600
	Unit	Height	mm	1270	1750
		Width	mm	595	595
		Depth	mm	595	595
Weight	Unit		kg	53	63
	Packed unit		kg	63.5	73
Packing	Material		-	EPS CARTON	EPS CARTON
	Weight		kg	10.5	11
Main components	Tank	Water Volume	l	194	282
		Material	-	Stainless Steel	Stainless Steel
		Max tank temperature	°C	75	75
		Max tank water pressure	bar	10	10
		Maximum heating coil water working temperature	°C	99	99
		Maximum heating coil water working pressure	bar	10	10
Tank	Insulation	Material	-	Polyurethane	Polyurethane
		Heat loss (*)	kW·h/day	1.128	1.512
		Min thickness	mm	50	50
Main components	Heat exchanger	Quantity	-	1	1
		Coil surface area	m^2	1.4	1.8
	Booster heater	Quantity	-	1	1
		Heater rating	kW	3	3
	Type		-	Immersion heater type	Immersion heater type
Piping connections	Water inlet domestic connection		in.	3/4 (female)	3/4 (female)
	Water outlet domestic connection		in.	3/4 (female)	3/4 (female)
	Recirculation		in.	3/4 (female)	3/4 (female)
	In coil connection		in.	3/4 (female)	3/4 (female)
	Out coil connection		in.	3/4 (female)	3/4 (female)
Thermometer			-	Yes	Yes
Mechanical thermostat (security)			-	Yes	Yes
Protection			-	-	-

(*): Heat loss according to EN 12897:2007

2.4.5 Indoor units - Control Box system

◆ Control Box - ATW-CBX-01

Control Box - ATW-CBX-01	
Power supply	~ 230 V 50 Hz
Maximum current (with DHWT electrical heater) / Maximum current (only electrical box)	19 A / 5 A
Maximum input (with DHWT electrical heater) / Maximum input (only electrical box)	4.2 kW / 0.8 kW
Ambient temperature range in operation	0°C to 40°C
Humidity range in operation	0% to 80% RH non-condensing
Product dimensions	490 x 360 x 100 mm
Packaging dimensions	510 x 380 x 150 mm
Net weight	5.45 kg
Colour of the cover	White, RAL 9016
Maximum diameter of power wiring harness	12 mm

2.4.6 Indoor units - Complementary system

◆ Cascade Controller - ATW-YCC-04

Cascade Controller - ATW-YCC-04	
Power supply	~ 230 V 50 Hz
Maximum current (with DHWT electrical heater) / Maximum current (only electrical box)	19 A / 5 A
Maximum input (with DHWT electrical heater) / Maximum input (only electrical box)	4.2 kW / 0.8 kW
Ambient temperature range in operation	0°C to 40°C
Humidity range in operation	0% to 80% RH non-condensing
Product dimensions	490 x 360 x 100 mm
Packaging dimensions	510 x 380 x 150 mm
Net weight	5.45 kg
Colour of the cover	White, RAL 9016
Maximum diameter of power wiring harness	12 mm

2.5 Component data

2.5.1 Outdoor units

◆ airH2O 800M - RASM-(2-6)(V)TW2E

				RASM-2VTW2E	RASM-3VTW2E	RASM-3.5VTW2E	RASM-4VTW2E	RASM-5VTW2E	RASM-6VTW2E	RASM-4TW2E	RASM-5TW2E	RASM-6TW2E
Compressor	Model	~ 230 V 50 Hz	-	WHP07600PSDPC9KQB	WHP07600PSDPC9KQB	WHP07600PSDPC9KQB	WHP13300PSDPC8FQC	WHP13300PSDPC8FQC	WHP13300PSDPC8FQC	-	-	-
		3N~ 400 V 50 Hz		-	-	-	-	-	-	WHP13300PSDPC8FQC	WHP13300PSDPC8FQC	WHP13300PSDPC8FQC
	Type		-	Rotary DC Inverter driven	Rotary DC Inverter driven	Rotary DC Inverter driven	Rotary DC Inverter driven	Rotary DC Inverter driven	Rotary DC Inverter driven	Rotary DC Inverter driven	Rotary DC Inverter driven	Rotary DC Inverter driven
	Pressure resistance	Discharge	MPa	3.0	3.0	3.0	3.0	3.0	3.0	3.0	3.0	3.0
		Suction	MPa	0.85	0.85	0.85	0.85	0.85	0.85	0.85	0.85	0.85
	Motor type	Starting method	-	Direct current control	Direct current control	Direct current control	Direct current control	Direct current control	Direct current control	Direct current control	Direct current control	Direct current control
		Poles	-	4	4	4	4	4	4	4	4	4
		Insulation class	-	E	E	E	E	E	E	E	E	E
	Oil type		-	HAF68	HAF68	HAF68	HAF68	HAF68	HAF68	HAF68	HAF68	HAF68
	Oil quantity		ml	840	840	840	1150	1150	1150	1150	1150	1150
Air heat exchanger	Type		-	Multi-pass cross-finned tube	Multi-pass cross-finned tube	Multi-pass cross-finned tube	Multi-pass cross-finned tube	Multi-pass cross-finned tube	Multi-pass cross-finned tube	Multi-pass cross-finned tube	Multi-pass cross-finned tube	Multi-pass cross-finned tube
	Pipe material		-	Copper	Copper	Copper	Copper	Copper	Copper	Copper	Copper	Copper
	Outer diameter		mm	7	7	7	7	7	7	7	7	7
	Rows		-	3	3	3	3	3	3	3	3	3
	Number of tubes in the heat exchanger		-	38	38	38	54	54	54	54	54	54
	Fin material		-	Aluminium	Aluminium	Aluminium	Aluminium	Aluminium	Aluminium	Aluminium	Aluminium	Aluminium
	Fin pitch		mm	1.45	1.45	1.45	1.45	1.45	1.45	1.45	1.45	1.45
	Maximum operating pressure		MPa	3	3	3	3	3	3	3	3	3
	Total front area		m^2	0.79	0.79	0.79	1.14	1.14	1.14	1.14	1.14	1.14
	Number of heat exchangers per unit		-	1	1	1	1	1	1	1	1	1
Fan	Fan type		-	Direct drive propeller fan	Direct drive propeller fan	Direct drive propeller fan	Direct drive propeller fan	Direct drive propeller fan	Direct drive propeller fan	Direct drive propeller fan	Direct drive propeller fan	Direct drive propeller fan
	Fans per unit		-	1	1	1	1	1	1	1	1	1
	Outer diameter		mm	449	449	449	627	627	627	627	627	627
	Revolutions		rpm	750	750	750	770	770	770	770	770	770
	Nominal air flow		m^3/min	2400	2700	3500	4800	5400	6000	4800	5400	6000
Motor	Type		-	Drip-proof type enclosure	Drip-proof type enclosure	Drip-proof type enclosure	Drip-proof type enclosure	Drip-proof type enclosure	Drip-proof type enclosure	Drip-proof type enclosure	Drip-proof type enclosure	Drip-proof type enclosure
	Starting method		-	Direct current control	Direct current control	Direct current control	Direct current control	Direct current control	Direct current control	Direct current control	Direct current control	Direct current control
	Power		W	200	200	200	380	380	380	380	380	380
	Quantity		-	1	1	1	1	1	1	1	1	1
	Insulation class		-	E	E	E	E	E	E	E	E	E

			Outdoor unit	RASM-2VTW2E	RASM-3VTW2E	RASM-3.5VTW2E	RASM-4VTW2E	RASM-5VTW2E	RASM-6VTW2E	RASM-4TW2E	RASM-5TW2E	RASM-6TW2E
Water heat exchanger	Type		-	Brazed plate	Brazed plate	Brazed plate	Brazed plate	Brazed plate	Brazed plate	Brazed plate	Brazed plate	Brazed plate
	Material		-	Stainless steel	Stainless steel	Stainless steel	Stainless steel	Stainless steel	Stainless steel	Stainless steel	Stainless steel	Stainless steel
	Transfer fluids		-	R290 - H_2O	R290 - H_2O	R290 - H_2O	R290 - H_2O	R290 - H_2O	R290 - H_2O	R290 - H_2O	R290 - H_2O	R290 - H_2O
	Quantity		-	1	1	1	1	1	1	1	1	1
	Internal refrigerant Volume		l	0.54	0.54	0.54	2.09	2.09	2.09	2.09	2.09	2.09
	Internal water Volume		l	0.57	0.57	0.57	2.18	2.18	2.18	2.18	2.18	2.18
	Insulation material		-	NBR + PVC	NBR + PVC	NBR + PVC	NBR + PVC	NBR + PVC	NBR + PVC	NBR + PVC	NBR + PVC	NBR + PVC
Water pump	Model		-	UPM3L K 15-75 130 AZA V9 HIT	UPM3L K 15-75 130 AZA V9 HIT	UPM3L K 15-75 130 AZA V9 HIT	UPM3L K 15-75 130 AZA V9 HIT	UPM3L K 15-75 130 AZA V9 HIT	UPM3L K 15-75 130 AZA V9 HIT	UPM3L K 15-75 130 AZA V9 HIT	UPM3L K 15-75 130 AZA V9 HIT	UPM3L K 15-75 130 AZA V9 HIT
	Type		-	Inverter	Inverter	Inverter	Inverter	Inverter	Inverter	Inverter	Inverter	Inverter
	Control		-	PWM	PWM	PWM	PWM	PWM	PWM	PWM	PWM	PWM
	Power supply		-	~230 V 50 Hz	~230 V 50 Hz	~230 V 50 Hz	~230 V 50 Hz	~230 V 50 Hz	~230 V 50 Hz	~230 V 50 Hz	~230 V 50 Hz	~230 V 50 Hz
	Maximum lift pressure		m	7.5	7.5	7.5	7.5	7.5	7.5	7.5	7.5	7.5
	Maximum water flow		m^3/h	4.0	4.0	4.0	4.0	4.0	4.0	4.0	4.0	4.0
	Maximum power input		W	75	75	75	75	75	75	75	75	75
	Piping	Water inlet	in.	G 1"	G 1"	G 1"	G 1"	G 1"	G 1"	G 1"	G 1"	G 1"
		Water outlet	in.	G 1"	G 1"	G 1"	G 1"	G 1"	G 1"	G 1"	G 1"	G 1"
		Inlet-outlet distance	mm	130	130	130	130	130	130	130	130	130
Air purger			-	Yes	Yes	Yes	Yes	Yes	Yes	Yes	Yes	Yes
Safety valve			-	Yes	Yes	Yes	Yes	Yes	Yes	Yes	Yes	Yes
Pressure sensor			-	Yes	Yes	Yes	Yes	Yes	Yes	Yes	Yes	Yes
Degasser			-	Yes	Yes	Yes	Yes	Yes	Yes	Yes	Yes	Yes
R290 leak detector			-	Yes	Yes	Yes	Yes	Yes	Yes	Yes	Yes	Yes
Check valve			-	Yes (Factory supplied and mandatory installation)								
Analogical manometer			-	No (Factory supplied with indoor hydrosplit unit)								
Unit controller			-									

2.5.2 Indoor units - Hydrosplit system

◆ airH2O 800H - HWM-W2E(-B)

Indoor unit				HWM-W2E(-B)
Water pump	Model		-	UPM3L K 15-75 130 AZA V9 HIT
	Type		-	Inverter
	Control		-	PWM
	Power supply		-	~ 230 V 50 Hz
	Maximum lift pressure		mwp	7.5
	Maximum water flow		m^3/h	4.0
	Maximum power input		W	75
	Piping	Water inlet	in.	G 1"
		Water outlet	in.	G 1"
		Inlet/outlet distance	mm	130
Water electric heater (not applicable to HWM-W2E-B)	Material		-	Stainless steel (immersion heating element)
	Power supply		-	~ 230 V 50 Hz - 3N~ 400 V 50 Hz
	Maximum electric heater power		kW	6.0
	Regulated electric heater power (step 1/ step 2/ step 3)		kW	2.0 / 4.0 / 6.0
	Capillary thermostat		-	Yes (cut-out: 90°C)
	Surface thermostat		-	Manual reset, non-adjustable (one per unit) 85°C±5%
Expansion Vessel	Material		-	Steel (with stainless/galvanized steel connections)
	Internal water volume		l	6.0
	Working pressure		bar	3.0
	Pre-loading pressure (air side)		bar	1.0
Water strainer	Type		-	Isolated water strainer (filter ball)
	Material		-	Brass
	Piping connection		in.	Inlet: 1” DN32; Outlet: 1” DN32
	Mesh (hole size)		mm	0.7
	Self-cleaning filter		-	Yes
Buffer tank	Type		-	Hydraulic separator and buffer tank
	Material		-	Stainless steel
	Internal water volume		l	14.4
	Working pressure		bar	3.5
	Piping connection		-	Quick fitting connections
Shut-off valve			-	Yes (4 factory-supplied valves)
Air purger			-	Yes
Manometer			-	Yes
Unit controller			-	Yes
IOT module			-	Yes

◆ airH2O 800H Combi - HWD-W2E-220S(-K)

	Indoor unit			HWD-W2E-220S(-K)
Domestic hot water tank	Casing material		-	Stainless steel
	Tank	Nominal water Volume	l	220
		Net water Volume	l	215
		Material	-	Duplex UNS 32205 (1.4462)
		Max. water temperature	°C	75
		Max. water pressure	bar	10
		Max. heating coil water temperature	°C	75
		Max. heating coil water pressure	bar	3
	Tank insulation	Material	-	Neoport
		Thickness	mm	50
		Heat loss (1)	kWh/24h	1.7
	Heat exchanger	Quantity	-	1
		Coil surface area	m^2	7.2
		Internal coil Volume	l	1.60
	Tank's heater	Quantity	-	1
		Type	-	Immersion heater type
		Heater rating	kW	2.7
	Mechanical thermostat (adjustable and security)		-	Yes (adjustable 28~80°C ; cut-out: 95°C)
Water pump	Model		-	UPM3L K 15-75 130 AZA V9 HIT
	Type		-	Inverter
	Control		-	PWM
	Power supply		-	~ 230 V 50 Hz
	Maximum lift pressure		mwp	7.5
	Maximum water flow		m^3/h	4.0
	Maximum power input		W	75
	Piping	Water inlet	in.	G 1"
		Water outlet	in.	G 1"
		Inlet/outlet distance	mm	130
Water electric heater	Material		-	Stainless steel (Immersion heating element)
	Power supply		-	~ 230 V 50 Hz - 3N~ 400 V 50 Hz
	Maximum electric heater power		kW	6.0
	Capillary thermostat		-	Manual reset, Non-adjustable (one per unit) 85°C±5%
	Regulated electric heater power (step 1/ step 2/ step 3)		kW	2.0 / 4.0 / 6.0
	Thermostat security		-	Yes (Cut-out: 90°C)

Indoor unit			HWD-W2E-220S(-K)
Expansion Vessel	Material	-	Steel (with stainless/galvanized steel connections)
	Internal water Volume	l	6.0
	Working pressure	bar	3.0
	Pre-loading pressure (Air side)	bar	1.0
Water strainer	Type	-	Isolated water strainer (filter ball)
	Material	-	Brass
	Piping connection	in.	Inlet: 1” DN32; Outlet: 1” DN32
	Mesh (hole size)	mm	0.7
	Self-cleaning (with back flush) filter	-	Yes
Buffer tank	Type	-	Hydraulic separator and buffer tank
	Material	-	Stainless steel
	Internal water volume	l	14.4
	Working pressure	bar	3.5
	Piping connection	-	Quick fitting connections
DHWT Pressure and temperature relief valve (2)		bar	7
		°C	96
Unit drain port		-	Yes
DHW drain valve		-	Yes
Shut-off valve		-	Yes (4 factory-supplied valves)
Air purger		-	Yes (x2)
Manometer		-	Yes
Unit controller		-	Yes
IOT module		-	Yes

(1) Based on a dT of 45 K.

(2) Only for UK Market

2.6 Electrical data

2.6.1 Considerations

- *Heating conditions:*
  - » *Inlet/outlet water temperature: 30/35°C;*
  - » *Outdoor ambient temperature (DB/WB): 7/6°C.*
- *The compressor data shown in the tables below are based on a combined capacity of 100% of the power supplied.*
- *The "Maximum current" shown in the above table is the maximum total unit running current at the following conditions:*
  - » *Supply voltage: 90% of the rated voltage.*
  - » *Unit capacity: 100% at maximum operating conditions.*
- *The power supply cables must be sized to cover this maximum current value.*
- *Specifications in these tables are subject to change without notice in order that Hitachi may bring the latest innovations to their customers.*

Key words:

✓ U: Power supply voltage (V)
✓ IPT: Total input power (kW)
✓ RNC: Running current (A)
✓ MC: Maximum current (A)

2.6.2 Outdoor units

◆ airH2O 800M - RASM-(2-6)(V)TW2E

Model	Power supply	Applicable voltage		Compressor and fan motors				MC (A)	Max. IPT (kW)
				Cooling		Heating			
		U max. (V)	U min. (V)	RNC (A)	IPT (kW)	RNC (A)	IPT (kW)		
RASM-2VTW2E	~ 230 V 50 Hz	253	207	6.3	1.28	4.2	0.85	14.2	2.88
RASM-3VTW2E				8.3	1.70	6.1	1.24	17.7	3.61
RASM-3.5VTW2E				10.4	2.13	8.5	1.74	20.7	4.23
RASM-4VTW2E				17.8	3.66	10.7	2.21	29.2	5.99
RASM-5VTW2E				19.8	4.06	13.9	2.85		
RASM-6VTW2E				21.5	4.41	16.2	3.33		
RASM-4TW2E	3~ 400 V 50 Hz	440	360	6.9	3.66	4.2	2.21	16.7	8.82
RASM-5TW2E				7.7	4.06	5.4	2.85		
RASM-6TW2E				8.3	4.41	6.3	3.33		

2.6.3 Indoor units - Hydrosplit system

◆ airH2O 800H - HWM-W2E(-B)

Model	Power supply	Applicable voltage		Operation mode	RNC (A)	IPT (kW)	MC (A)	Max. IPT (kW)
		U max. (V)	U min. (V)					
HWM-W2E(-B)	~ 230 V 50 Hz	253	207	Without electric heater	0.6	0.08	0.65	0.08
				With electric heater (*1)	26.7	6.08	26.7	6.08
				With DHW tank heater (*2)	13.7	3.08	13.7	3.08
				With DHW tank and electric heaters (*1) (*2)	39.8	9.08	39.8	9.08
	3~ 400 V 50 Hz	440	360	Without electric heater	0.6	0.08	0.7	0.08
				With electric heater (*1)	9.1	6.08	9.3	6.08
				With DHW tank heater (*2)	4.5	3.08	13.7	3.08
				With DHW tank and electric heaters (*1) (*2)	13.3	9.08	22.4	9.08

NOTE

*(*1): Not applicable to HWM-W2E-B*

*(*2): The data corresponding to DHW tank heater is calculated in combination with the domestic hot water tank accessory "DHWT-(200/300)S-3.0H2E".*

◆ airH2O 800H Combi - HWD-W2E-220S(-K)

Model	Power supply	Applicable voltage		Operation mode	RNC (A)	IPT (kW)	MC (A)	Max. IPT (kW)
		U max. (V)	U min. (V)					
HWD-W2E-220S(-K)	~ 230 V 50 Hz	253	207	Without electric heater	0.6	0.08	0.65	0.08
				With electric heater	26.7	6.08	26.7	6.08
				With DHW tank heater	12.6	2.83	12.6	2.83
				With DHW tank and electric heaters	38.7	8.83	38.7	8.83
	3~ 400 V 50 Hz	440	360	Without electric heater	0.6	0.08	0.65	0.08
				With electric heater	17.4	6.08	18	6.08
				With DHW tank heater	12.6	2.83	12.6	2.83
				With DHW tank and electric heaters	17.4	8.83	18	8.83

2.6.4 Indoor units - Control Box system

◆ Control Box - ATW-CBX-01

Model	Main unit power		Applicable voltage		MC (A)
	U (V)	F (Hz)	U max (V)	U min (V)	
ATW-CBX-01 (with DHW electric heater)	~ 230	50	253	207	16
ATW-CBX-01 (only electrical box)	~ 230	50	253	207	5

2.6.5 Indoor units - Complementary system

◆ Cascade Controller - ATW-YCC-04

Model	Main unit power		Applicable voltage		MC (A)
	U (V)	F (Hz)	U max (V)	U min (V)	
ATW-YCC-04 (with DHW electric heater)	~ 230	50	253	207	16
ATW-YCC-04 (only electrical box)	~ 230	50	253	207	5

Capacity and selection data

3.1 Maximum heating capacity tables (kW) 41
3.1.1 Hydrosplit system / Control Box system 42
3.1.2 Hydrosplit system + heaters / Control Box system + WEH-6E 44
3.2 Maximum cooling capacity table (kW) 46
3.2.1 Hydrosplit system / Control Box system 46
3.3 Correction factors 48
3.3.1 Correction factor owing to use of glycol 48
3.3.2 Correction factor depending on the altitude 49
3.4 Hi-ToolKit selection software 49

3.1 Maximum heating capacity tables (kW)

The tables below show the input power (IPT) at maximum capacity (CAP):

- CAP: Capacity (kW) at compressor maximum frequency + heaters (if indicated). Heat pump capacity is valid for differences between water inlet and water outlet of heat pump of 3 °C - 8 °C.
- IPT: Total input power (kW).

Most of the time, the unit will run at partial load, so that the actual input power will be lower. The calculation of **airH2O 800** maximum capacity data at standard humidity conditions has been based on the most representative locations considering:

- Standard humidity condition.
- Low installation altitude location (< 300 m).

The defrost correction factor may increase due to severe climate conditions, such as high humidity conditions.

3.1.1 Hydrosplit system / Control Box system

System	Water outlet temp (°C)	Ambient temperature (°C WB)																															
		-20			-15			-10			-7			-2			2			7			12			15			20			25		
		CAP (kW)	IPT (kW)	COP	CAP (kW)	IPT (kW)	COP	CAP (kW)	IPT (kW)	COP	CAP (kW)	IPT (kW)	COP	CAP (kW)	IPT (kW)	COP	CAP (kW)	IPT (kW)	COP	CAP (kW)	IPT (kW)	COP	CAP (kW)	IPT (kW)	COP	CAP (kW)	IPT (kW)	COP	CAP (kW)	IPT (kW)	COP	CAP (kW)	IPT (kW)	COP
RASM-2VTW2E	75	-	-	-	-	-	-	-	-	-	3.19	2.60	1.23	3.67	2.61	1.41	3.42	2.13	1.60	4.19	2.44	1.72	4.46	2.52	1.77	4.46	2.52	1.77	4.46	2.52	1.77	4.46	2.52	1.77
	70	-	-	-	-	-	-	-	-	-	3.46	2.66	1.30	3.84	2.60	1.48	3.42	2.13	1.61	4.19	2.25	1.86	4.50	1.99	2.26	4.50	1.99	2.26	4.50	1.99	2.26	4.50	1.99	2.26
	65	-	-	-	2.89	2.31	1.25	3.10	2.14	1.45	3.56	2.23	1.60	4.34	2.39	1.82	4.06	2.11	1.92	4.57	1.94	2.35	4.50	1.81	2.49	4.50	1.81	2.49	4.50	1.81	2.49	4.50	1.81	2.49
	60	2.79	2.27	1.23	3.20	2.28	1.40	3.88	2.37	1.64	4.24	2.37	1.79	4.43	2.20	2.01	4.47	2.05	2.18	5.48	2.16	2.54	5.42	1.91	2.84	5.42	1.91	2.84	5.42	1.91	2.84	5.42	1.91	2.84
	55	2.90	2.31	1.26	3.36	2.31	1.45	4.44	2.33	1.91	4.50	2.22	2.03	4.59	2.06	2.23	4.50	1.90	2.37	6.00	1.93	3.11	6.00	1.90	3.16	6.00	1.90	3.16	6.00	1.90	3.16	6.00	1.90	3.16
	50	3.06	2.11	1.45	3.51	2.13	1.65	3.98	2.11	1.89	4.38	2.07	2.12	4.60	1.83	2.51	4.66	1.65	2.83	6.00	1.76	3.41	6.00	1.65	3.64	6.00	1.65	3.64	6.00	1.65	3.64	6.00	1.65	3.64
	45	3.21	1.91	1.68	3.66	1.95	1.88	3.51	1.88	1.87	4.08	1.83	2.23	4.62	1.61	2.88	4.87	1.42	3.43	6.00	1.58	3.79	6.01	1.41	4.27	6.01	1.41	4.27	6.01	1.41	4.27	6.01	1.41	4.27
	40	3.33	1.80	1.85	3.81	1.83	2.09	4.08	1.79	2.27	4.51	1.76	2.56	4.81	1.57	3.06	4.87	1.38	3.53	6.00	1.41	4.26	6.18	1.21	5.08	6.18	1.21	5.08	6.18	1.21	5.08	6.18	1.21	5.08
	35	3.45	1.68	2.05	3.96	1.70	2.33	4.30	1.62	2.65	4.56	1.59	2.87	5.00	1.53	3.26	4.50	1.24	3.64	6.00	1.25	4.82	6.00	0.97	6.22	6.00	0.97	6.22	6.00	0.97	6.22	6.00	0.97	6.22
	30	3.54	1.58	2.24	4.03	1.61	2.51	3.94	1.51	2.61	4.49	1.50	3.00	4.98	1.35	3.70	5.21	1.17	4.44	6.00	0.93	6.43	6.00	0.84	7.11	6.00	0.84	7.11	6.00	0.84	7.11	6.00	0.84	7.11
	25	-	-	-	-	-	-	-	-	-	-	-	-	-	-	-	4.79	1.37	3.50	6.00	1.12	5.38	6.27	0.79	7.95	6.27	0.79	7.95	6.27	0.79	7.95	6.27	0.79	7.95
	20	-	-	-	-	-	-	-	-	-	-	-	-	-	-	-	4.79	1.37	3.50	6.00	1.12	5.38	6.27	0.79	7.95	6.27	0.79	7.95	6.27	0.79	7.95	6.27	0.79	7.95
RASM-3VTW2E	75	-	-	-	-	-	-	-	-	-	3.28	2.83	1.16	3.87	2.85	1.36	4.34	2.87	1.51	4.92	2.96	1.66	5.33	2.98	1.79	5.33	2.98	1.79	5.33	2.98	1.79	5.33	2.98	1.79
	70	-	-	-	-	-	-	-	-	-	3.76	2.93	1.29	4.17	2.84	1.47	4.50	2.78	1.62	5.42	2.93	1.85	5.71	2.50	2.28	5.71	2.50	2.28	5.71	2.50	2.28	5.71	2.50	2.28
	65	-	-	-	3.49	3.35	1.04	3.93	3.30	1.19	4.53	3.38	1.34	5.29	3.12	1.70	5.38	2.73	1.97	5.61	2.57	2.19	6.00	2.35	2.56	6.00	2.35	2.56	6.00	2.35	2.56	6.00	2.35	2.56
	60	3.48	2.88	1.21	4.11	3.03	1.36	5.46	3.09	1.77	5.67	3.09	1.84	6.03	3.09	1.95	5.70	2.57	2.22	5.90	2.36	2.50	6.76	2.40	2.82	6.76	2.40	2.82	6.76	2.40	2.82	6.76	2.40	2.82
	55	3.72	3.03	1.23	4.32	3.03	1.43	6.04	3.09	1.95	6.00	2.93	2.05	6.47	2.92	2.22	6.00	2.48	2.42	8.00	2.64	3.03	7.74	2.49	3.11	7.74	2.49	3.11	7.74	2.49	3.11	7.74	2.49	3.11
	50	3.86	2.72	1.42	4.50	2.75	1.64	5.41	2.78	1.95	5.75	2.70	2.12	6.31	2.58	2.44	6.01	2.12	2.84	8.00	2.35	3.41	8.04	2.24	3.58	8.04	2.24	3.58	8.04	2.24	3.58	8.04	2.24	3.58
	45	4.01	2.42	1.66	4.69	2.48	1.89	4.79	2.47	1.94	5.29	2.38	2.22	6.14	2.24	2.74	6.15	1.81	3.41	8.00	2.08	3.85	8.00	1.92	4.17	8.00	1.92	4.17	8.00	1.92	4.17	8.00	1.92	4.17
	40	4.16	2.28	1.82	4.82	2.33	2.07	5.28	2.27	2.33	5.69	2.23	2.55	6.36	2.18	2.92	6.19	1.81	3.43	8.00	1.88	4.25	8.00	1.59	5.02	8.00	1.59	5.02	8.00	1.59	5.02	8.00	1.59	5.02
	35	4.31	2.15	2.00	4.96	2.19	2.27	5.78	2.07	2.80	6.08	2.08	2.92	6.21	1.96	3.17	6.50	1.89	3.45	8.00	1.70	4.69	8.25	1.36	6.06	8.25	1.36	6.06	8.25	1.36	6.06	8.25	1.36	6.06
	30	4.47	2.00	2.23	5.18	2.03	2.55	5.26	1.92	2.75	5.77	1.92	3.01	6.60	1.92	3.44	6.14	1.46	4.20	8.00	1.34	5.98	8.25	1.28	6.43	8.25	1.28	6.43	8.25	1.28	6.43	8.25	1.28	6.43
	25	-	-	-	-	-	-	-	-	-	-	-	-	-	-	-	5.89	1.70	3.50	8.00	1.51	5.38	8.28	1.14	7.95	8.28	1.14	7.25	8.28	1.14	7.25	8.28	1.14	7.25
	20	-	-	-	-	-	-	-	-	-	-	-	-	-	-	-	5.89	1.70	3.50	8.00	1.51	5.38	8.28	1.14	7.95	8.28	1.14	7.25	8.28	1.14	7.25	8.28	1.14	7.25
RASM-3.5VTW2E	75	-	-	-	-	-	-	-	-	-	3.30	3.05	1.08	4.02	3.11	1.30	4.60	3.15	1.46	5.44	3.35	1.62	6.34	3.53	1.80	6.34	3.53	1.80	6.34	3.53	1.80	6.34	3.53	1.80
	70	-	-	-	-	-	-	-	-	-	4.06	3.21	1.26	4.50	3.09	1.46	4.86	3.00	1.62	6.23	3.37	1.85	7.51	3.27	2.29	7.51	3.27	2.29	7.51	3.27	2.29	7.51	3.27	2.29
	65	-	-	-	3.60	3.78	0.95	4.15	3.96	1.05	4.73	3.96	1.20	5.70	3.96	1.44	6.48	3.96	1.63	7.04	3.41	2.06	7.88	2.98	2.65	7.88	2.98	2.65	7.88	2.98	2.65	7.88	2.98	2.65
	60	3.87	3.34	1.16	4.79	3.75	1.28	6.92	3.84	1.80	6.85	3.84	1.78	6.74	3.84	1.75	6.64	3.84	1.73	7.77	3.62	2.15	7.73	3.05	2.53	7.73	3.05	2.53	7.73	3.05	2.53	7.73	3.05	2.53
	55	5.01	3.74	1.34	5.82	3.74	1.55	7.56	3.77	2.01	7.56	3.74	2.02	7.55	3.71	2.04	7.46	3.46	2.16	9.00	3.37	2.67	8.76	2.92	3.00	8.76	2.92	3.00	8.76	2.92	3.00	8.76	2.92	3.00
	50	4.92	3.48	1.42	6.03	3.55	1.70	7.67	3.81	2.02	7.63	3.70	2.06	7.55	3.52	2.15	7.43	3.13	2.38	9.00	2.96	3.04	9.10	2.65	3.43	9.10	2.65	3.43	9.10	2.65	3.43	9.10	2.65	3.43
	45	4.84	3.21	1.51	6.24	3.36	1.86	7.78	3.84	2.02	7.70	3.65	2.11	7.56	3.33	2.27	7.39	2.79	2.65	9.20	2.36	3.90	9.44	2.39	3.95	9.44	2.39	3.95	9.44	2.39	3.95	9.44	2.39	3.95
	40	5.04	3.09	1.63	6.14	3.24	1.90	7.79	3.43	2.27	7.76	3.30	2.35	7.70	3.09	2.49	7.56	2.71	2.79	9.60	2.41	3.98	9.35	1.93	4.84	9.35	1.93	4.84	9.35	1.93	4.84	9.35	1.93	4.84
	35	5.24	2.97	1.77	6.04	3.12	1.94	7.79	3.01	2.59	8.00	3.02	2.65	7.85	2.85	2.75	8.00	2.82	2.84	10.00	2.47	4.05	9.78	1.68	5.84	9.78	1.68	5.84	9.78	1.68	5.84	9.78	1.68	5.84
	30	5.64	2.72	2.07	6.97	2.77	2.52	7.99	2.97	2.69	7.92	2.85	2.78	7.81	2.64	2.96	7.76	2.35	3.31	10.00	2.08	4.81	10.01	1.68	5.94	10.01	1.68	5.94	10.01	1.68	5.94	10.01	1.68	5.94
	25	-	-	-	-	-	-	-	-	-	-	-	-	-	-	-	7.72	2.24	3.45	10.00	2.05	4.88	10.00	1.62	6.17	10.00	1.62	6.17	10.00	1.62	6.17	10.00	1.62	6.17
	20	-	-	-	-	-	-	-	-	-	-	-	-	-	-	-	7.72	2.24	3.45	10.00	2.05	4.88	10.00	1.62	6.17	10.00	1.62	6.17	10.00	1.62	6.17	10.00	1.62	6.17

System	Water outlet temp (°C)	Ambient temperature (°C WB)																																	
		-20			-15			-10			-7			-2			2			7			12			15			20			25		
		CAP (kW)	IPT (kW)	COP	CAP (kW)	IPT (kW)	COP	CAP (kW)	IPT (kW)	COP	CAP (kW)	IPT (kW)	COP	CAP (kW)	IPT (kW)	COP	CAP (kW)	IPT (kW)	COP	CAP (kW)	IPT (kW)	COP	CAP (kW)	IPT (kW)	COP	CAP (kW)	IPT (kW)	COP	CAP (kW)	IPT (kW)	COP	CAP (kW)	IPT (kW)	COP
RASM-4(V)TW2E	75	-	-	-	-	-	-	-	-	-	6.55	4.52	1.45	6.68	4.37	1.53	6.79	4.25	1.60	7.64	4.17	1.83	7.72	3.17	2.44	7.72	3.17	2.44	7.72	3.17	2.44	7.72	3.17	2.44
	70	-	-	-	-	-	-	-	-	-	6.86	4.43	1.55	7.12	4.27	1.67	7.32	4.15	1.77	7.46	3.25	2.29	8.26	2.98	2.77	8.26	2.98	2.77	8.26	2.98	2.77	8.26	2.98	2.77
	65	-	-	-	8.12	5.01	1.62	8.44	4.92	1.71	8.63	4.87	1.77	9.23	5.14	1.79	9.72	5.36	1.81	10.02	4.21	2.38	8.46	2.65	3.19	8.46	2.65	3.19	8.46	2.65	3.19	8.46	2.65	3.19
	60	7.00	4.67	1.50	8.56	4.67	1.83	8.94	4.59	1.95	9.17	4.54	2.02	10.02	4.54	2.21	10.71	4.54	2.36	10.39	3.00	3.46	10.63	2.95	3.60	10.63	2.95	3.60	10.63	2.95	3.60	10.63	2.95	3.60
	55	7.03	4.40	1.60	8.05	4.40	1.83	8.90	4.40	2.02	10.00	4.66	2.15	9.38	4.03	2.33	9.91	4.04	2.45	12.00	3.54	3.39	12.03	3.03	3.97	12.03	3.03	3.97	12.03	3.03	3.97	12.03	3.03	3.97
	50	7.35	4.10	1.79	8.36	4.09	2.04	9.56	4.22	2.27	10.29	4.30	2.39	9.94	4.00	2.49	10.27	4.07	2.52	12.04	3.04	3.96	11.45	2.61	4.39	11.45	2.61	4.39	11.45	2.61	4.39	11.45	2.61	4.39
	45	7.13	3.33	2.14	8.11	3.45	2.35	9.51	3.67	2.59	10.35	3.80	2.72	9.78	3.62	2.70	10.04	3.79	2.65	11.53	2.50	4.61	13.46	2.77	4.86	13.46	2.77	4.86	13.46	2.77	4.86	13.46	2.77	4.86
	40	7.39	3.11	2.38	8.40	3.30	2.54	9.70	3.64	2.66	10.48	3.85	2.72	9.98	3.43	2.91	10.21	3.39	3.01	11.28	2.53	4.46	11.61	2.09	5.57	11.61	2.09	5.57	11.61	2.09	5.57	11.61	2.09	5.57
	35	7.65	2.89	2.65	8.68	3.15	2.76	9.89	3.62	2.73	10.61	3.90	2.72	10.17	3.24	3.14	10.38	2.99	3.47	11.96	2.87	4.17	12.36	1.98	6.23	12.36	1.98	6.23	12.36	1.98	6.23	12.36	1.98	6.23
	30	7.37	2.76	2.67	7.81	2.93	2.67	8.86	3.08	2.87	9.49	3.17	2.99	10.03	2.92	3.43	10.47	2.73	3.84	12.08	1.93	6.27	12.51	1.81	6.93	12.51	1.81	6.93	12.51	1.81	6.93	12.51	1.81	6.93
	25	-	-	-	-	-	-	-	-	-	-	-	-	-	-	-	9.68	2.84	3.41	11.85	2.56	4.62	13.12	1.91	6.87	13.12	1.91	6.87	13.12	1.91	6.87	13.12	1.91	6.87
	20	-	-	-	-	-	-	-	-	-	-	-	-	-	-	-	9.68	2.84	3.41	11.85	2.56	4.62	13.12	1.91	6.87	13.12	1.91	6.87	13.12	1.91	6.87	13.12	1.91	6.87
RASM-5(V)TW2E	75	-	-	-	-	-	-	-	-	-	7.50	5.05	1.48	7.40	4.80	1.54	7.32	4.59	1.59	8.80	5.18	1.70	7.72	3.17	2.44	7.72	3.17	2.44	7.72	3.17	2.44	7.72	3.17	2.44
	70	-	-	-	-	-	-	-	-	-	7.60	4.96	1.53	7.74	4.68	1.65	7.86	4.46	1.76	8.93	3.95	2.26	9.26	3.37	2.74	9.26	3.37	2.74	9.26	3.37	2.74	9.26	3.37	2.74
	65	-	-	-	9.36	5.81	1.61	9.66	5.69	1.70	9.84	5.61	1.75	10.72	6.02	1.78	10.44	5.78	1.81	12.11	5.12	2.37	11.33	4.13	2.74	11.33	4.13	2.74	11.33	4.13	2.74	11.33	4.13	2.74
	60	8.56	5.13	1.67	9.74	6.02	1.62	10.13	5.83	1.74	10.37	5.72	1.81	11.29	5.72	1.98	11.39	5.10	2.23	12.82	3.75	3.42	12.46	3.48	3.58	12.46	3.48	3.58	12.46	3.48	3.58	12.46	3.48	3.58
	55	8.57	5.87	1.46	9.89	5.87	1.69	11.16	5.87	1.90	11.93	5.87	2.03	11.41	5.27	2.17	12.00	5.33	2.25	14.00	4.50	3.11	14.36	3.71	3.87	14.36	3.71	3.87	14.36	3.71	3.87	14.36	3.71	3.87
	50	8.40	5.24	1.60	9.47	4.92	1.92	10.87	5.07	2.15	11.72	5.15	2.27	12.02	5.19	2.32	12.26	5.21	2.35	14.13	3.87	3.65	13.91	3.24	4.30	13.91	3.24	4.30	13.91	3.24	4.30	13.91	3.24	4.30
	45	8.75	5.15	1.70	9.68	4.53	2.14	11.40	4.81	2.37	12.43	4.98	2.49	12.63	5.11	2.47	12.78	5.20	2.46	13.75	3.15	4.37	13.46	2.77	4.86	13.46	2.77	4.86	13.46	2.77	4.86	13.46	2.77	4.86
	40	8.87	4.34	2.04	9.96	4.19	2.38	11.46	4.64	2.47	12.36	4.91	2.52	12.62	4.81	2.63	12.83	4.72	2.72	14.15	3.52	4.02	13.78	2.54	5.42	13.78	2.54	5.42	13.78	2.54	5.42	13.78	2.54	5.42
	35	8.99	3.53	2.55	10.25	3.85	2.66	11.53	4.47	2.58	12.30	4.84	2.54	12.62	4.51	2.80	13.00	4.30	3.02	14.00	3.55	3.94	14.10	2.31	6.09	14.10	2.31	6.09	14.10	2.31	6.09	14.10	2.31	6.09
	30	9.45	3.65	2.59	10.02	4.02	2.49	11.49	4.15	2.77	12.37	4.23	2.93	12.02	3.57	3.36	12.22	3.24	3.77	14.67	2.52	5.83	14.50	2.12	6.83	14.50	2.12	6.83	14.50	2.12	6.83	14.50	2.12	6.83
	25	-	-	-	-	-	-	-	-	-	-	-	-	-	-	-	11.96	2.84	4.22	14.34	2.56	5.59	15.39	2.47	6.23	15.39	2.47	6.23	15.39	2.47	6.23	15.39	2.47	6.23
	20	-	-	-	-	-	-	-	-	-	-	-	-	-	-	-	11.96	2.84	4.22	14.34	2.56	5.59	15.39	2.47	6.23	15.39	2.47	6.23	15.39	2.47	6.23	15.39	2.47	6.23
RASM-6(V)TW2E	75	-	-	-	-	-	-	-	-	-	8.59	5.62	1.53	8.22	5.25	1.57	7.93	4.95	1.60	9.36	5.72	1.64	10.56	4.43	2.38	10.56	4.43	2.38	10.56	4.43	2.38	10.56	4.43	2.38
	70	-	-	-	-	-	-	-	-	-	8.86	5.91	1.50	8.76	5.36	1.64	8.32	4.72	1.76	9.79	4.40	2.22	10.35	3.81	2.71	10.35	3.81	2.71	10.35	3.81	2.71	10.35	3.81	2.71
	65	-	-	-	9.36	5.81	1.61	9.66	5.69	1.70	9.84	5.61	1.75	10.72	6.02	1.78	11.42	6.36	1.80	12.11	5.12	2.37	12.05	4.71	2.56	12.05	4.71	2.56	12.05	4.71	2.56	12.05	4.71	2.56
	60	8.56	5.13	1.67	9.74	6.02	1.62	10.13	5.83	1.74	10.37	5.72	1.81	11.29	5.72	1.98	12.04	5.72	2.11	14.06	4.34	3.24	15.38	4.32	3.56	15.38	4.32	3.56	15.38	4.32	3.56	15.38	4.32	3.56
	55	9.10	6.48	1.40	10.54	6.48	1.63	12.05	6.48	1.86	12.96	6.48	2.00	12.86	6.26	2.05	13.00	6.18	2.10	16.00	5.45	2.94	15.67	4.14	3.79	15.67	4.14	3.79	15.67	4.14	3.79	15.67	4.14	3.79
	50	9.48	6.83	1.39	10.53	5.94	1.77	12.05	6.04	2.00	12.97	6.10	2.13	13.40	6.11	2.19	13.75	6.12	2.25	15.92	5.03	3.16	15.49	3.67	4.22	15.49	3.67	4.22	15.49	3.67	4.22	15.49	3.67	4.22
	45	9.87	7.18	1.37	10.52	5.40	1.95	12.05	5.60	2.15	12.97	5.72	2.27	13.94	5.95	2.34	14.72	6.14	2.40	16.05	4.69	3.42	15.30	3.20	4.79	15.30	3.20	4.79	15.30	3.20	4.79	15.30	3.20	4.79
	40	9.73	5.53	1.76	10.75	4.80	2.24	12.13	5.26	2.31	13.20	5.65	2.34	13.85	5.58	2.48	14.57	5.63	2.59	15.89	4.80	3.31	16.37	3.16	5.19	16.37	3.16	5.19	16.37	3.16	5.19	16.37	3.16	5.19
	35	9.59	3.87	2.48	10.98	4.21	2.61	12.21	4.91	2.48	13.50	5.55	2.43	13.76	5.21	2.64	14.50	5.15	2.82	16.00	4.74	3.38	15.72	2.76	5.70	15.72	2.76	5.70	15.72	2.76	5.70	15.72	2.76	5.70
	30	10.64	3.92	2.71	10.83	4.69	2.31	12.28	4.64	2.65	13.50	4.73	2.85	13.76	4.18	3.29	14.26	3.84	3.72	17.29	3.61	4.79	17.45	2.63	6.63	17.45	2.63	6.63	17.45	2.63	6.63	17.45	2.63	6.63
	25	-	-	-	-	-	-	-	-	-	-	-	-	-	-	-	14.18	2.84	5.00	16.31	2.56	6.36	19.02	3.85	4.94	19.02	3.85	4.94	19.02	3.85	4.94	19.02	3.85	4.94
	20	-	-	-	-	-	-	-	-	-	-	-	-	-	-	-	14.18	2.84	5.00	16.31	2.56	6.36	19.02	3.85	4.94	19.02	3.85	4.94	19.02	3.85	4.94	19.02	3.85	4.94

3.1.2 Hydrosplit system + heaters / Control Box system + WEH-6E

System	Water outlet temp (°C)	Ambient temperature (°C WB)																																	
		-20			-15			-10			-7			-2			2			7			12			15			20			25		
		CAP (kW)	IPT (kW)	COP	CAP (kW)	IPT (kW)	COP	CAP (kW)	IPT (kW)	COP	CAP (kW)	IPT (kW)	COP	CAP (kW)	IPT (kW)	COP	CAP (kW)	IPT (kW)	COP	CAP (kW)	IPT (kW)	COP	CAP (kW)	IPT (kW)	COP	CAP (kW)	IPT (kW)	COP	CAP (kW)	IPT (kW)	COP	CAP (kW)	IPT (kW)	COP	CAP (kW)	IPT (kW)	COP
RASM-2VTW2E	75	-	-	-	-	-	-	-	-	-	9.19	8.60	1.07	9.67	8.61	1.12	9.42	8.13	1.16	10.19	8.44	1.21	10.46	8.52	1.23	10.46	8.52	1.23	10.46	8.52	1.23	10.46	8.52	1.23	10.46	8.52	1.23
	70	-	-	-	-	-	-	-	-	-	9.46	8.66	1.09	9.84	8.60	1.14	9.42	8.13	1.16	10.19	8.25	1.23	10.50	7.99	1.31	10.50	7.99	1.31	10.50	7.99	1.31	10.50	7.99	1.31	10.50	7.99	1.31
	65	-	-	-	8.89	8.31	1.07	9.10	8.14	1.12	9.56	8.23	1.16	10.34	8.39	1.23	10.06	8.11	1.24	10.57	7.94	1.33	10.50	7.81	1.34	10.50	7.81	1.34	10.50	7.81	1.34	10.50	7.81	1.34	10.50	7.81	1.34
	60	8.79	8.27	1.06	9.20	8.28	1.11	9.88	8.37	1.18	10.24	8.37	1.22	10.43	8.20	1.27	10.47	8.05	1.30	11.48	8.16	1.41	11.42	7.91	1.44	11.42	7.91	1.44	11.42	7.91	1.44	11.42	7.91	1.44	11.42	7.91	1.44
	55	8.90	8.31	1.07	9.36	8.31	1.13	10.44	8.33	1.25	10.50	8.22	1.28	10.59	8.06	1.31	10.50	7.90	1.33	12.00	7.93	1.51	12.00	7.90	1.52	12.00	7.90	1.52	12.00	7.90	1.52	12.00	7.90	1.52	12.00	7.90	1.52
	50	9.06	8.11	1.12	9.51	8.13	1.17	9.98	8.11	1.23	10.38	8.07	1.29	10.60	7.83	1.35	10.66	7.65	1.39	12.00	7.76	1.55	12.00	7.65	1.57	12.00	7.65	1.57	12.00	7.65	1.57	12.00	7.65	1.57	12.00	7.65	1.57
	45	9.21	7.91	1.16	9.66	7.95	1.22	9.51	7.88	1.21	10.08	7.83	1.29	10.62	7.61	1.40	10.87	7.42	1.47	12.00	7.58	1.58	12.01	7.41	1.62	12.01	7.41	1.62	12.01	7.41	1.62	12.01	7.41	1.62	12.01	7.41	1.62
	40	9.33	7.80	1.20	9.81	7.83	1.25	10.08	7.79	1.29	10.51	7.76	1.35	10.81	7.57	1.43	10.87	7.38	1.47	12.00	7.41	1.62	12.18	7.21	1.69	12.18	7.21	1.69	12.18	7.21	1.69	12.18	7.21	1.69	12.18	7.21	1.69
	35	9.45	7.68	1.23	9.96	7.70	1.29	10.30	7.62	1.35	10.56	7.59	1.39	11.00	7.53	1.46	10.50	7.24	1.45	12.00	7.25	1.66	12.00	6.97	1.72	12.00	6.97	1.72	12.00	6.97	1.72	12.00	6.97	1.72	12.00	6.97	1.72
	30	9.54	7.58	1.26	10.03	7.61	1.32	9.94	7.51	1.32	10.49	7.50	1.40	10.98	7.35	1.49	11.21	7.17	1.56	12.00	6.93	1.73	12.00	6.84	1.75	12.00	6.84	1.75	12.00	6.84	1.75	12.00	6.84	1.75	12.00	6.84	1.75
	25	-	-	-	-	-	-	-	-	-	-	-	-	-	-	-	10.79	7.37	1.46	12.00	7.12	1.69	12.27	6.79	1.81	12.27	6.79	1.81	12.27	6.79	1.81	12.27	6.79	1.81	12.27	6.79	1.81
	20	-	-	-	-	-	-	-	-	-	-	-	-	-	-	-	10.79	7.37	1.46	12.00	7.12	1.69	12.27	6.79	1.81	12.27	6.79	1.81	12.27	6.79	1.81	12.27	6.79	1.81	12.27	6.79	1.81
RASM-3VTW2E	75	-	-	-	-	-	-	-	-	-	9.28	8.83	1.05	9.87	8.85	1.11	10.34	8.87	1.17	10.92	8.96	1.22	11.33	8.98	1.26	11.33	8.98	1.26	11.33	8.98	1.26	11.33	8.98	1.26	11.33	8.98	1.26
	70	-	-	-	-	-	-	-	-	-	9.76	8.93	1.09	10.17	8.84	1.15	10.50	8.78	1.20	11.42	8.93	1.28	11.71	8.50	1.38	11.71	8.50	1.38	11.71	8.50	1.38	11.71	8.50	1.38	11.71	8.50	1.38
	65	-	-	-	9.49	9.35	1.02	9.93	9.30	1.07	10.53	9.38	1.12	11.29	9.12	1.24	11.38	8.73	1.30	11.61	8.57	1.36	12.00	8.35	1.44	12.00	8.35	1.44	12.00	8.35	1.44	12.00	8.35	1.44	12.00	8.35	1.44
	60	9.48	8.88	1.07	10.11	9.03	1.12	11.46	9.09	1.26	11.67	9.09	1.28	12.03	9.09	1.32	11.70	8.57	1.37	11.90	8.36	1.42	12.76	8.40	1.52	12.76	8.40	1.52	12.76	8.40	1.52	12.76	8.40	1.52	12.76	8.40	1.52
	55	9.72	9.03	1.08	10.32	9.03	1.14	12.04	9.09	1.32	12.00	8.93	1.34	12.47	8.92	1.40	12.00	8.48	1.42	14.00	8.64	1.62	13.74	8.49	1.62	13.74	8.49	1.62	13.74	8.49	1.62	13.74	8.49	1.62	13.74	8.49	1.62
	50	9.86	8.72	1.13	10.50	8.75	1.20	11.41	8.78	1.30	11.75	8.70	1.35	12.31	8.58	1.43	12.01	8.12	1.48	14.00	8.35	1.68	14.04	8.24	1.70	14.04	8.24	1.70	14.04	8.24	1.70	14.04	8.24	1.70	14.04	8.24	1.70
	45	10.01	8.42	1.19	10.69	8.48	1.26	10.79	8.47	1.27	11.29	8.38	1.35	12.14	8.24	1.47	12.15	7.81	1.56	14.00	8.08	1.73	14.00	7.92	1.77	14.00	7.92	1.77	14.00	7.92	1.77	14.00	7.92	1.77	14.00	7.92	1.77
	40	10.16	8.28	1.23	10.82	8.33	1.30	11.28	8.27	1.37	11.69	8.23	1.42	12.36	8.18	1.51	12.19	7.81	1.56	14.00	7.88	1.78	14.00	7.59	1.84	14.00	7.59	1.84	14.00	7.59	1.84	14.00	7.59	1.84	14.00	7.59	1.84
	35	10.31	8.15	1.26	10.96	8.19	1.34	11.78	8.07	1.46	12.08	8.08	1.49	12.21	7.96	1.53	12.50	7.89	1.59	14.00	7.70	1.82	14.25	7.36	1.94	14.25	7.36	1.94	14.25	7.36	1.94	14.25	7.36	1.94	14.25	7.36	1.94
	30	10.47	8.00	1.31	11.18	8.03	1.39	11.26	7.92	1.42	11.77	7.92	1.49	12.60	7.92	1.59	12.14	7.46	1.63	14.00	7.34	1.91	14.25	7.28	1.96	14.25	7.28	1.96	14.25	7.28	1.96	14.25	7.28	1.96	14.25	7.28	1.96
	25	-	-	-	-	-	-	-	-	-	-	-	-	-	-	-	11.89	7.70	1.54	14.00	7.51	1.86	14.28	7.14	2.00	14.28	7.14	2.00	14.28	7.14	2.00	14.28	7.14	2.00	14.28	7.14	2.00
	20	-	-	-	-	-	-	-	-	-	-	-	-	-	-	-	11.89	7.70	1.54	14.00	7.51	1.86	14.28	7.14	2.00	14.28	7.14	2.00	14.28	7.14	2.00	14.28	7.14	2.00	14.28	7.14	2.00
RASM-3.5VTW2E	75	-	-	-	-	-	-	-	-	-	9.30	9.05	1.03	10.02	9.11	1.10	10.60	9.15	1.16	11.44	9.35	1.22	12.34	9.53	1.30	12.34	9.53	1.30	12.34	9.53	1.30	12.34	9.53	1.30	12.34	9.53	1.30
	70	-	-	-	-	-	-	-	-	-	10.06	9.21	1.09	10.50	9.09	1.16	10.86	9.00	1.21	12.23	9.37	1.31	13.51	9.27	1.46	13.51	9.27	1.46	13.51	9.27	1.46	13.51	9.27	1.46	13.51	9.27	1.46
	65	-	-	-	9.60	9.78	0.98	10.15	9.96	1.02	10.73	9.96	1.08	11.70	9.96	1.17	12.48	9.96	1.25	13.04	9.41	1.39	13.88	8.98	1.55	13.88	8.98	1.55	13.88	8.98	1.55	13.88	8.98	1.55	13.88	8.98	1.55
	60	9.87	9.34	1.06	10.79	9.75	1.11	12.92	9.84	1.31	12.85	9.84	1.31	12.74	9.84	1.29	12.64	9.84	1.28	13.77	9.62	1.43	13.73	9.05	1.52	13.73	9.05	1.52	13.73	9.05	1.52	13.73	9.05	1.52	13.73	9.05	1.52
	55	11.01	9.74	1.13	11.82	9.74	1.21	13.56	9.77	1.39	13.56	9.74	1.39	13.55	9.71	1.40	13.46	9.46	1.42	15.00	9.37	1.60	14.76	8.92	1.66	14.76	8.92	1.66	14.76	8.92	1.66	14.76	8.92	1.66	14.76	8.92	1.66
	50	10.92	9.48	1.15	12.03	9.55	1.26	13.67	9.81	1.39	13.63	9.70	1.41	13.55	9.52	1.42	13.43	9.13	1.47	15.00	8.96	1.67	15.10	8.65	1.74	15.10	8.65	1.74	15.10	8.65	1.74	15.10	8.65	1.74	15.10	8.65	1.74
	45	10.84	9.21	1.18	12.24	9.36	1.31	13.78	9.84	1.40	13.70	9.65	1.42	13.56	9.33	1.45	13.39	8.79	1.52	15.20	8.36	1.82	15.44	8.39	1.84	15.44	8.39	1.84	15.44	8.39	1.84	15.44	8.39	1.84	15.44	8.39	1.84
	40	11.04	9.09	1.21	12.14	9.24	1.31	13.79	9.43	1.46	13.76	9.30	1.48	13.70	9.09	1.51	13.56	8.71	1.56	15.60	8.41	1.85	15.35	7.93	1.94	15.35	7.93	1.94	15.35	7.93	1.94	15.35	7.93	1.94	15.35	7.93	1.94
	35	11.24	8.97	1.25	12.04	9.12	1.32	13.79	9.01	1.53	14.00	9.02	1.55	13.85	8.85	1.56	14.00	8.82	1.59	16.00	8.47	1.89	15.78	7.68	2.06	15.78	7.68	2.06	15.78	7.68	2.06	15.78	7.68	2.06	15.78	7.68	2.06
	30	11.64	8.72	1.34	12.97	8.77	1.48	13.99	8.97	1.56	13.92	8.85	1.57	13.81	8.64	1.60	13.76	8.35	1.65	16.00	8.08	1.98	16.01	7.68	2.08	16.01	7.68	2.08	16.01	7.68	2.08	16.01	7.68	2.08	16.01	7.68	2.08
	25	-	-	-	-	-	-	-	-	-	-	-	-	-	-	-	13.72	8.24	1.66	16.00	8.05	1.99	16.00	7.62	2.10	16.00	7.62	2.10	16.00	7.62	2.10	16.00	7.62	2.10	16.00	7.62	2.10
	20	-	-	-	-	-	-	-	-	-	-	-	-	-	-	-	13.72	8.24	1.66	16.00	8.05	1.99	16.00	7.62	2.10	16.00	7.62	2.10	16.00	7.62	2.10	16.00	7.62	2.10	16.00	7.62	2.10

System	Water outlet temp (°C)	Ambient temperature (°C WB)																																	
		-20			-15			-10			-7			-2			2			7			12			15			20			25		
		CAP (kW)	IPT (kW)	COP	CAP (kW)	IPT (kW)	COP	CAP (kW)	IPT (kW)	COP	CAP (kW)	IPT (kW)	COP	CAP (kW)	IPT (kW)	COP	CAP (kW)	IPT (kW)	COP	CAP (kW)	IPT (kW)	COP	CAP (kW)	IPT (kW)	COP	CAP (kW)	IPT (kW)	COP	CAP (kW)	IPT (kW)	COP	CAP (kW)	IPT (kW)	COP
RASM-4(V)TW2E	75	-	-	-	-	-	-	-	-	-	12.55	10.52	1.19	12.68	10.37	1.22	12.79	10.25	1.25	13.64	10.17	1.34	13.72	9.17	1.50	13.72	9.17	1.50	13.72	9.17	1.50	13.72	9.17	1.50
	70	-	-	-	-	-	-	-	-	-	12.86	10.43	1.23	13.12	10.27	1.28	13.32	10.15	1.31	13.46	9.25	1.45	14.26	8.98	1.59	14.26	8.98	1.59	14.26	8.98	1.59	14.26	8.98	1.59
	65	-	-	-	14.12	11.01	1.28	14.44	10.92	1.32	14.63	10.87	1.35	15.23	11.14	1.37	15.72	11.36	1.38	16.02	10.21	1.57	14.46	8.65	1.67	14.46	8.65	1.67	14.46	8.65	1.67	14.46	8.65	1.67
	60	13.00	10.67	1.22	14.56	10.67	1.36	14.94	10.59	1.41	15.17	10.54	1.44	16.02	10.54	1.52	16.71	10.54	1.58	16.39	9.00	1.82	16.63	8.95	1.86	16.63	8.95	1.86	16.63	8.95	1.86	16.63	8.95	1.86
	55	13.03	10.40	1.25	14.05	10.40	1.35	14.90	10.40	1.43	16.00	10.66	1.50	15.38	10.03	1.53	15.91	10.04	1.58	18.00	9.54	1.89	18.03	9.03	2.00	18.03	9.03	2.00	18.03	9.03	2.00	18.03	9.03	2.00
	50	13.35	10.10	1.32	14.36	10.09	1.42	15.56	10.22	1.52	16.29	10.30	1.58	15.94	10.00	1.59	16.27	10.07	1.62	18.04	9.04	2.00	17.45	8.61	2.03	17.45	8.61	2.03	17.45	8.61	2.03	17.45	8.61	2.03
	45	13.13	9.33	1.41	14.11	9.45	1.49	15.51	9.67	1.60	16.35	9.80	1.67	15.78	9.62	1.64	16.04	9.79	1.64	17.53	8.50	2.06	19.46	8.77	2.22	19.46	8.77	2.22	19.46	8.77	2.22	19.46	8.77	2.22
	40	13.39	9.11	1.47	14.40	9.30	1.55	15.70	9.64	1.63	16.48	9.85	1.67	15.98	9.43	1.69	16.21	9.39	1.73	17.28	8.53	2.03	17.61	8.09	2.18	17.61	8.09	2.18	17.61	8.09	2.18	17.61	8.09	2.18
	35	13.65	8.89	1.54	14.68	9.15	1.60	15.89	9.62	1.65	16.61	9.90	1.68	16.17	9.24	1.75	16.38	8.99	1.82	17.96	8.87	2.03	18.36	7.98	2.30	18.36	7.98	2.30	18.36	7.98	2.30	18.36	7.98	2.30
	30	13.37	8.76	1.53	13.81	8.93	1.55	14.86	9.08	1.64	15.49	9.17	1.69	16.03	8.92	1.80	16.47	8.73	1.89	18.08	7.93	2.28	18.51	7.81	2.37	18.51	7.81	2.37	18.51	7.81	2.37	18.51	7.81	2.37
	25	-	-	-	-	-	-	-	-	-	-	-	-	-	-	-	15.68	8.84	1.77	17.85	8.56	2.08	19.12	7.91	2.42	19.12	7.91	2.42	19.12	7.91	2.42	19.12	7.91	2.42
	20	-	-	-	-	-	-	-	-	-	-	-	-	-	-	-	15.68	8.84	1.77	17.85	8.56	2.08	19.12	7.91	2.42	19.12	7.91	2.42	19.12	7.91	2.42	19.12	7.91	2.42
RASM-5(V)TW2E	75	-	-	-	-	-	-	-	-	-	13.50	11.05	1.22	13.40	10.80	1.24	13.32	10.59	1.26	14.80	11.18	1.32	13.72	9.17	1.50	13.72	9.17	1.50	13.72	9.17	1.50	13.72	9.17	1.50
	70	-	-	-	-	-	-	-	-	-	13.60	10.96	1.24	13.74	10.68	1.29	13.86	10.46	1.32	14.93	9.95	1.50	15.26	9.37	1.63	15.26	9.37	1.63	15.26	9.37	1.63	15.26	9.37	1.63
	65	-	-	-	15.36	11.81	1.30	15.66	11.69	1.34	15.84	11.61	1.36	16.72	12.02	1.39	16.44	11.78	1.40	18.11	11.12	1.63	17.33	10.13	1.71	17.33	10.13	1.71	17.33	10.13	1.71	17.33	10.13	1.71
	60	14.56	11.13	1.31	15.74	12.02	1.31	16.13	11.83	1.36	16.37	11.72	1.40	17.29	11.72	1.48	17.39	11.10	1.57	18.82	9.75	1.93	18.46	9.48	1.95	18.46	9.48	1.95	18.46	9.48	1.95	18.46	9.48	1.95
	55	14.57	11.87	1.23	15.89	11.87	1.34	17.16	11.87	1.45	17.93	11.87	1.51	17.41	11.27	1.55	18.00	11.33	1.59	20.00	10.50	1.90	20.36	9.71	2.10	20.36	9.71	2.10	20.36	9.71	2.10	20.36	9.71	2.10
	50	14.40	11.24	1.28	15.47	10.92	1.42	16.87	11.07	1.52	17.72	11.15	1.59	18.02	11.19	1.61	18.26	11.21	1.63	20.13	9.87	2.04	19.91	9.24	2.16	19.91	9.24	2.16	19.91	9.24	2.16	19.91	9.24	2.16
	45	14.75	11.15	1.32	15.68	10.53	1.49	17.40	10.81	1.61	18.43	10.98	1.68	18.63	11.11	1.68	18.78	11.20	1.68	19.75	9.15	2.16	19.46	8.77	2.22	19.46	8.77	2.22	19.46	8.77	2.22	19.46	8.77	2.22
	40	14.87	10.34	1.44	15.96	10.19	1.57	17.46	10.64	1.64	18.36	10.91	1.68	18.62	10.81	1.72	18.83	10.72	1.76	20.15	9.52	2.12	19.78	8.54	2.32	19.78	8.54	2.32	19.78	8.54	2.32	19.78	8.54	2.32
	35	14.99	9.53	1.57	16.25	9.85	1.65	17.53	10.47	1.67	18.30	10.84	1.69	18.62	10.51	1.77	19.00	10.30	1.84	20.00	9.55	2.09	20.10	8.31	2.42	20.10	8.31	2.42	20.10	8.31	2.42	20.10	8.31	2.42
	30	15.45	9.65	1.60	16.02	10.02	1.60	17.49	10.15	1.72	18.37	10.23	1.80	18.02	9.57	1.88	18.22	9.24	1.97	20.67	8.52	2.43	20.50	8.12	2.52	20.50	8.12	2.52	20.50	8.12	2.52	20.50	8.12	2.52
	25	-	-	-	-	-	-	-	-	-	-	-	-	-	-	-	17.96	8.84	2.03	20.34	8.56	2.38	21.39	8.47	2.52	21.39	8.47	2.52	21.39	8.47	2.52	21.39	8.47	2.52
	20	-	-	-	-	-	-	-	-	-	-	-	-	-	-	-	17.96	8.84	2.03	20.34	8.56	2.38	21.39	8.47	2.52	21.39	8.47	2.52	21.39	8.47	2.52	21.39	8.47	2.52
RASM-6(V)TW2E	75	-	-	-	-	-	-	-	-	-	14.59	11.62	1.25	14.22	11.25	1.26	13.93	10.95	1.27	15.36	11.72	1.31	16.56	10.43	1.59	16.56	10.43	1.59	16.56	10.43	1.59	16.56	10.43	1.59
	70	-	-	-	-	-	-	-	-	-	14.86	11.91	1.25	14.76	11.36	1.30	14.32	10.72	1.34	15.79	10.40	1.52	16.35	9.81	1.67	16.35	9.81	1.67	16.35	9.81	1.67	16.35	9.81	1.67
	65	-	-	-	15.36	11.81	1.30	15.66	11.69	1.34	15.84	11.61	1.36	16.72	12.02	1.39	17.42	12.36	1.41	18.11	11.12	1.63	18.05	10.71	1.68	18.05	10.71	1.68	18.05	10.71	1.68	18.05	10.71	1.68
	60	14.56	11.13	1.31	15.74	12.02	1.31	16.13	11.83	1.36	16.37	11.72	1.40	17.29	11.72	1.48	18.04	11.72	1.54	20.06	10.34	1.94	21.38	10.32	2.07	21.38	10.32	2.07	21.38	10.32	2.07	21.38	10.32	2.07
	55	15.10	12.48	1.21	16.54	12.48	1.33	18.05	12.48	1.45	18.96	12.48	1.52	18.86	12.26	1.54	19.00	12.18	1.56	22.00	11.45	1.92	21.67	10.14	2.14	21.67	10.14	2.14	21.67	10.14	2.14	21.67	10.14	2.14
	50	15.48	12.83	1.21	16.53	11.94	1.38	18.05	12.04	1.50	18.97	12.10	1.57	19.40	12.11	1.60	19.75	12.12	1.63	21.92	11.03	1.99	21.49	9.67	2.22	21.49	9.67	2.22	21.49	9.67	2.22	21.49	9.67	2.22
	45	15.87	13.18	1.20	16.52	11.40	1.45	18.05	11.60	1.56	18.97	11.72	1.62	19.94	11.95	1.67	20.72	12.14	1.71	22.05	10.69	2.06	21.30	9.20	2.32	21.30	9.20	2.32	21.30	9.20	2.32	21.30	9.20	2.32
	40	15.73	11.53	1.36	16.75	10.80	1.55	18.13	11.26	1.61	19.20	11.65	1.65	19.85	11.58	1.71	20.57	11.63	1.77	21.89	10.80	2.03	22.37	9.16	2.44	22.37	9.16	2.44	22.37	9.16	2.44	22.37	9.16	2.44
	35	15.59	9.87	1.58	16.98	10.21	1.66	18.21	10.91	1.67	19.50	11.55	1.69	19.76	11.21	1.76	20.50	11.15	1.84	22.00	10.74	2.05	21.72	8.76	2.48	21.72	8.76	2.48	21.72	8.76	2.48	21.72	8.76	2.48
	30	16.64	9.92	1.68	16.83	10.69	1.57	18.28	10.64	1.72	19.50	10.73	1.82	19.76	10.18	1.94	20.26	9.84	2.06	23.29	9.61	2.42	23.45	8.63	2.72	23.45	8.63	2.72	23.45	8.63	2.72	23.45	8.63	2.72
	25	-	-	-	-	-	-	-	-	-	-	-	-	-	-	-	20.18	8.84	2.28	22.31	8.56	2.61	25.02	9.85	2.54	25.02	9.85	2.54	25.02	9.85	2.54	25.02	9.85	2.54
	20	-	-	-	-	-	-	-	-	-	-	-	-	-	-	-	20.18	8.84	2.28	22.31	8.56	2.61	25.02	9.85	2.54	25.02	9.85	2.54	25.02	9.85	2.54	25.02	9.85	2.54

3.2 Maximum cooling capacity table (kW)

3.2.1 Hydrosplit system / Control Box system

System	Ambient temperature (°C DB/WB)	Water outlet temp (°C)																	
		5			7			10			15			18			22		
		CAP (kW)	IPT (kW)	EER	CAP (kW)	IPT (kW)	EER	CAP (kW)	IPT (kW)	EER	CAP (kW)	IPT (kW)	EER	CAP (kW)	IPT (kW)	EER	CAP (kW)	IPT (kW)	EER
RASM-2VTW2E	46	4.05	1.72	2.35	4.03	1.70	2.38	4.01	1.43	2.80	4.24	1.53	2.78	4.30	1.54	2.79	4.23	1.22	3.46
	40	4.05	1.63	2.48	4.17	1.61	2.58	4.36	1.59	2.74	4.57	1.49	3.06	4.62	1.39	3.32	4.85	1.34	3.63
	35	4.09	1.53	2.68	4.50	1.50	3.00	5.12	1.56	3.27	5.32	1.52	3.50	5.50	1.47	3.74	5.50	1.42	3.86
	30	4.18	1.39	3.00	4.36	1.49	2.92	5.16	1.51	3.41	5.46	1.56	3.50	5.58	1.52	3.66	6.27	1.47	4.27
	25	4.28	1.38	3.10	4.44	1.35	3.30	5.22	1.56	3.36	5.43	1.49	3.65	5.55	1.40	3.98	5.89	1.29	4.57
	20	4.39	1.36	3.22	4.55	1.34	3.40	5.28	1.60	3.31	5.30	1.42	3.73	5.31	1.27	4.17	5.90	1.10	5.34
	15	4.49	1.35	3.34	4.79	1.43	3.36	5.68	1.73	3.29	5.88	1.48	3.97	5.89	1.29	4.56	5.93	1.13	5.25
	10	-	-	-	4.79	1.43	3.36	5.68	1.73	3.29	5.88	1.48	3.97	-	-	-	-	-	-
RASM-3VTW2E	46	5.87	2.49	2.35	5.85	2.46	2.38	5.77	1.97	2.93	5.97	2.15	2.78	5.88	2.11	2.79	5.79	1.67	3.46
	40	5.87	2.36	2.48	6.05	2.34	2.58	6.32	2.31	2.74	6.43	2.10	3.06	6.32	1.90	3.32	6.64	1.83	3.63
	35	5.93	2.21	2.68	6.53	2.18	3.00	7.42	2.27	3.27	7.49	2.14	3.50	7.53	2.01	3.74	7.52	1.95	3.86
	30	6.06	2.02	3.00	6.32	2.17	2.92	7.48	2.19	3.41	7.69	2.20	3.50	7.64	2.09	3.66	8.58	2.01	4.27
	25	6.21	2.00	3.10	6.42	1.95	3.29	7.57	2.26	3.36	7.65	2.09	3.65	7.60	1.91	3.98	8.06	1.76	4.57
	20	6.36	1.98	3.22	6.58	1.94	3.39	7.66	2.32	3.31	7.46	2.00	3.73	7.26	1.74	4.17	8.08	1.51	5.34
	15	6.51	1.95	3.34	6.90	2.07	3.34	8.23	2.51	3.29	8.27	2.08	3.97	8.06	1.77	4.56	8.11	1.54	5.25
	10	-	-	-	6.90	2.07	3.34	8.23	2.51	3.29	8.27	2.08	3.97	-	-	-	-	-	-
RASM-3.5VTW2E	46	6.75	2.87	2.35	6.72	2.83	2.38	6.63	2.26	2.93	6.80	2.45	2.78	6.64	2.38	2.79	6.54	1.89	3.46
	40	6.75	2.72	2.48	6.95	2.69	2.58	7.27	2.65	2.74	7.32	2.40	3.06	7.14	2.15	3.32	7.50	2.06	3.63
	35	6.82	2.54	2.68	7.50	2.50	3.00	8.53	2.61	3.27	8.54	2.44	3.50	8.50	2.27	3.74	8.50	2.20	3.86
	30	6.97	2.32	3.00	7.26	2.49	2.92	8.59	2.52	3.41	8.76	2.51	3.50	8.63	2.36	3.66	9.69	2.27	4.27
	25	7.14	2.30	3.10	7.38	2.24	3.29	8.70	2.59	3.36	8.71	2.39	3.65	8.58	2.16	3.98	9.11	1.99	4.57
	20	7.31	2.27	3.22	7.56	2.23	3.39	8.81	2.66	3.31	8.50	2.27	3.73	8.20	1.97	4.17	9.12	1.71	5.34
	15	7.49	2.24	3.34	7.93	2.38	3.34	9.46	2.88	3.29	9.43	2.37	3.97	9.11	2.00	4.56	9.16	1.74	5.25
	10	-	-	-	7.93	2.38	3.34	9.46	2.88	3.29	9.43	2.37	3.97	-	-	-	-	-	-

System	Ambient temperature (°C DB/WB)	Water outlet temp (°C)																	
		5			7			10			15			18			22		
		CAP (kW)	IPT (kW)	EER	CAP (kW)	IPT (kW)	EER	CAP (kW)	IPT (kW)	EER	CAP (kW)	IPT (kW)	EER	CAP (kW)	IPT (kW)	EER	CAP (kW)	IPT (kW)	EER
RASM-4(V)TW2E	46	6.91	4.29	1.61	7.83	4.19	1.87	7.68	3.32	2.31	7.97	3.41	2.33	8.21	3.34	2.46	7.76	2.62	2.97
	40	8.53	3.66	2.33	8.93	3.62	2.47	9.54	3.56	2.68	9.58	3.11	3.08	9.62	2.84	3.38	10.28	2.72	3.78
	35	9.30	3.27	2.84	9.96	3.66	2.72	10.97	3.29	3.33	10.34	3.11	3.32	10.09	3.03	3.33	11.70	2.76	4.23
	30	9.54	2.99	3.19	10.52	3.14	3.35	11.14	3.15	3.54	10.64	2.55	4.18	10.63	2.23	4.76	12.49	2.73	4.58
	25	9.84	2.93	3.36	10.87	3.04	3.58	11.33	3.19	3.55	10.58	2.32	4.56	10.34	1.88	5.51	11.27	2.34	4.81
	20	10.15	2.85	3.56	11.13	2.92	3.82	11.51	3.23	3.57	10.75	2.33	4.61	10.40	1.88	5.53	11.64	2.22	5.25
	15	10.45	2.79	3.75	11.89	2.80	4.24	12.14	3.49	3.48	10.98	2.50	4.40	10.37	2.01	5.15	11.75	2.19	5.36
	10	-	-	-	11.89	2.80	4.24	12.14	3.49	3.48	10.98	2.50	4.40	-	-	-	-	-	-
RASM-5(V)TW2E	46	7.66	4.75	1.61	8.68	4.65	1.87	8.51	3.68	2.31	9.55	4.09	2.33	9.72	3.96	2.46	9.19	3.10	2.97
	40	9.45	4.06	2.33	9.90	4.01	2.47	10.58	3.94	2.68	11.49	3.73	3.08	11.39	3.37	3.38	12.17	3.22	3.78
	35	10.31	3.63	2.84	11.04	4.06	2.72	12.16	3.65	3.33	12.40	3.74	3.32	11.94	3.59	3.33	13.86	3.27	4.23
	30	10.57	3.32	3.19	11.66	3.49	3.35	12.35	3.49	3.54	12.77	3.05	4.18	12.59	2.64	4.76	14.78	3.23	4.58
	25	10.91	3.25	3.36	12.05	3.37	3.58	12.55	3.54	3.55	12.69	2.78	4.56	12.24	2.22	5.51	13.35	2.78	4.81
	20	11.25	3.16	3.56	12.34	3.23	3.82	12.76	3.58	3.57	12.90	2.80	4.61	12.31	2.23	5.53	13.78	2.63	5.25
	15	11.59	3.09	3.75	13.18	3.11	4.24	13.45	3.87	3.48	13.17	2.99	4.40	12.28	2.39	5.15	13.91	2.59	5.36
	10	-	-	-	13.18	3.11	4.24	13.45	3.87	3.48	13.17	2.99	4.40	-	-	-	-	-	-
RASM-6(V)TW2E	46	8.32	5.16	1.61	9.44	5.05	1.87	9.25	4.00	2.31	9.93	4.25	2.33	11.15	4.80	2.32	9.53	3.21	2.97
	40	10.28	4.41	2.33	10.76	4.36	2.47	11.50	4.28	2.68	11.94	3.87	3.08	13.45	4.08	3.30	12.62	3.34	3.78
	35	11.20	3.94	2.84	12.00	4.41	2.72	13.22	3.97	3.33	12.88	3.88	3.32	14.00	4.23	3.31	14.36	3.39	4.23
	30	11.49	3.61	3.19	12.67	3.79	3.35	13.42	3.79	3.54	13.27	3.17	4.18	13.94	3.05	4.57	15.33	3.35	4.58
	25	11.86	3.53	3.36	13.10	3.66	3.58	13.64	3.84	3.55	13.19	2.89	4.56	13.77	2.59	5.31	13.84	2.88	4.81
	20	12.23	3.44	3.56	13.41	3.51	3.82	13.87	3.89	3.57	13.40	2.91	4.61	14.05	2.66	5.28	14.29	2.72	5.25
	15	12.60	3.36	3.75	14.33	3.38	4.24	14.62	4.20	3.48	13.68	3.11	4.40	14.08	2.85	4.93	14.42	2.69	5.36
	10	-	-	-	14.33	3.38	4.24	14.62	4.20	3.48	13.68	3.11	4.40	-	-	-	-	-	-

Maximum cooling capacity table

- CAP: Capacity at compressor maximum frequency (kW). Capacity is valid for difference between water inlet and water outlet of 3°C - 8°C.
- IPT: Total input power (kW).

3.3 Correction factors

3.3.1 Correction factor owing to use of glycol

⚠ CAUTION

This chapter is only applicable to the corresponding models of Hydrosplit system and Control Box system.

◆ Application at low ambient temperature

When the ambient temperature is low in winter, the water in the pipes and circulating pump may freeze and damage the pipes and water pumps during shutdown periods.

To prevent this, it is useful to drain the water from the installation or not to cut off the power supply of the installation, as an electrical cable can prevent the water from freezing in the circuit.

In addition, in cases where it is difficult to drain the water, it is advisable to use a mixture with antifreeze glycol (at a concentration between 10% and 30%).

Unit performance may be reduced when operating with glycol, depending on the percentage of glycol used, since glycol is denser than water.

Table for glycol is shown below, indicating the percentage of glycol recommended for diverse values of outdoor air inlet temperature, with their respective correction factors.

Corrected heating capacity = capacity correction factor owing to use of glycol × heating capacity

✓ Ethylene glycol

Ambient temperature	DB (°C)	-3	-7	-13
Percentage of glycol required	%	10	20	30
Capacity correction factor	f_{gh}	1.00	1.00	0.99
Consumed power correction factor	f_{gi}	1.01	1.02	1.03
Flow rate correction factor	f_{gc}	1.01	1.01	1.02
Pressure loss correction factor	f_{gp}	1.03	1.09	1.16

✓ Propylene glycol

Ambient Temperature	DB (°C)	-3	-7	-13
Percentage of glycol required	%	10	20	30
Capacity correction factor	f_{gh}	1.00	1.00	0.99
Consumed power correction factor	f_{gi}	1.01	1.02	1.03
Flow rate correction factor	f_{gc}	1.02	1.02	1.04
Pressure loss correction factor	f_{gp}	1.24	1.31	1.39

CAUTION

- *The use of glycol affect to the reading of some parameters like "water flow level" and "capacity" shown through the unit controller menu. When glycol is used, these data are not correct and must be not used.*
- *Do not use a concentration of glycol higher than 30%.*

3.3.2 Correction factor depending on the altitude

All outdoor unit models

The capacity must be corrected by the affectations of installation altitude of the installation location. When the altitude is above sea level, capacity must be corrected with the altitude correction factor according to the following equation.

Altitude	m	0	300	600	900	1200	1500	1800	2000
Correction factor		1.00	0.97	0.94	0.90	0.88	0.84	0.81	0.81

3.4 Hi-ToolKit selection software

Hi-ToolKit for Home is Hitachi software that has been specifically developed to assist professionals working in the field of residential heating. More than just software for selecting air/water heat pumps, Hi-ToolKit for Home is a genuine technical and financial tool. In just a few clicks, Hi-Toolkit for Home allows you to create a general, a technical and a financial proposal for an end-user, which can be used to complement your quote. When you choose Hi-Toolkit for Home, you are certain to make the right choice when it comes to Hitachi heat pumps.

To access this tool go to *https://www.hitachi-hitoolkit.com*.

Sound data

4.1 Sound power level 51
4.1.1 Outdoor units 51
4.1.2 Indoor units- Hydrosplit system 52
4.2 Considerations for sound pressure level 52
4.3 Sound pressure level 53
4.3.1 Outdoor units 53
4.3.2 Indoor units- Hydrosplit system 54
4.4 Sound pressure reduction 55
4.4.1 Estimated sound reduction based on the outdoor unit distance 55
4.4.2 Estimated sound reduction based on night shift function 55
4.5 Sound power reduction 56
4.5.1 Estimated sound reduction based on night shift function 56

4.1 Sound power level

4.1.1 Outdoor units

RASM-2VTW2E	RASM-3VTW2E	RASM-3.5VTW2E
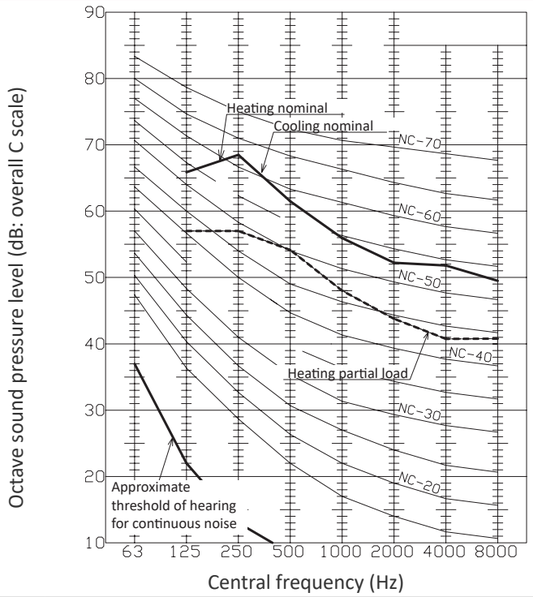	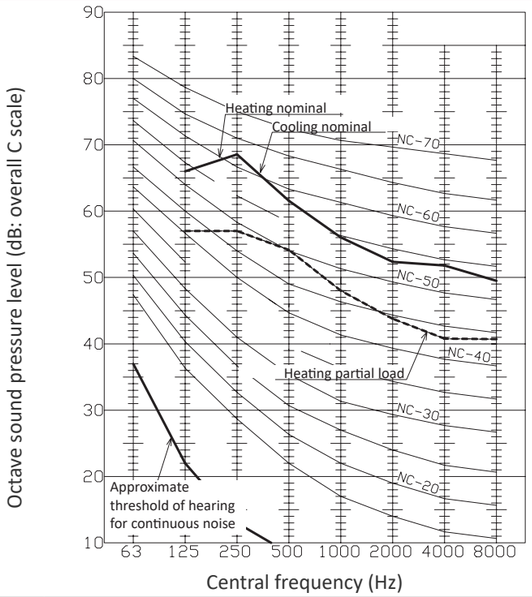	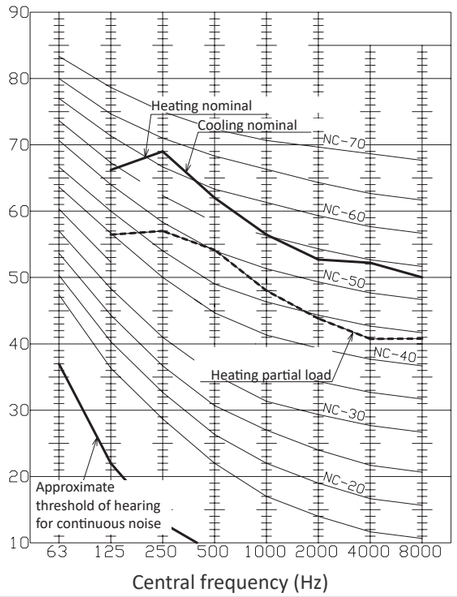
Cooling/Heating nominal: 62/62 dB(A) Heating partial load: 55 dB(A)	Cooling/Heating nominal: 63/63 dB(A) Heating partial load: 56 dB(A)	Cooling/Heating nominal: 65/65 dB(A) Heating partial load: 57 dB(A)
RASM-4(V)TW2E	**RASM-5(V)TW2E**	**RASM-6(V)TW2E**
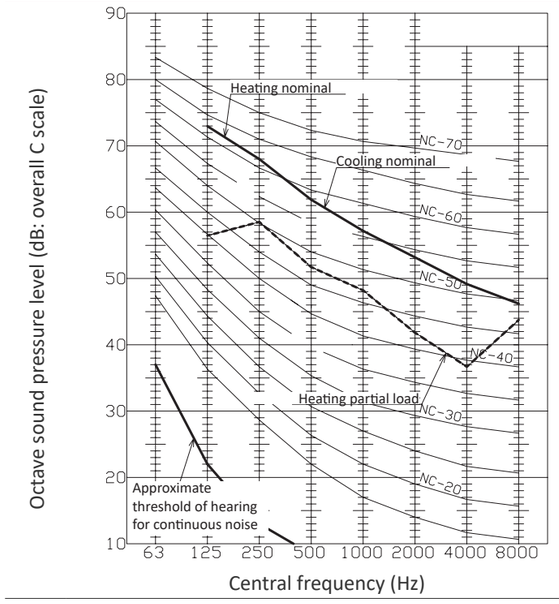	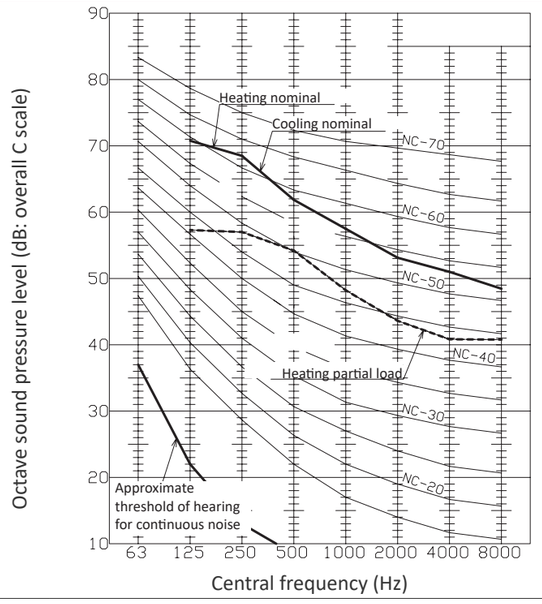	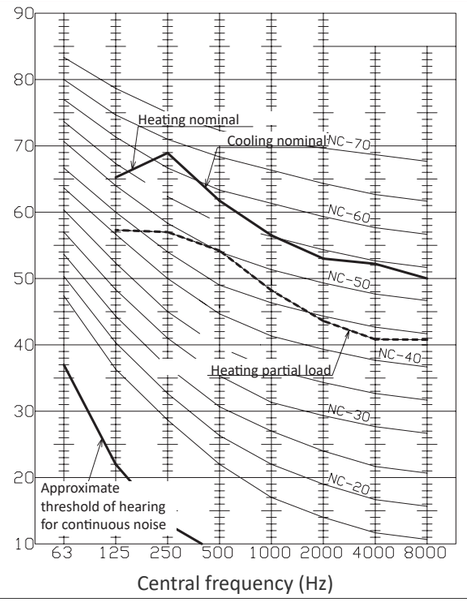
Cooling/Heating nominal: 64/64 dB(A) Heating partial load: 53 dB(A)	Cooling/Heating nominal: 65/65 dB(A) Heating part load: 54 dB(A)	Cooling/Heating nominal: 65/65 dB(A) Heating part load: 54 dB(A)

4.1.2 Indoor units - Hydrosplit system

HWM-W2E(-B) / HWD-W2E-220S(-K)

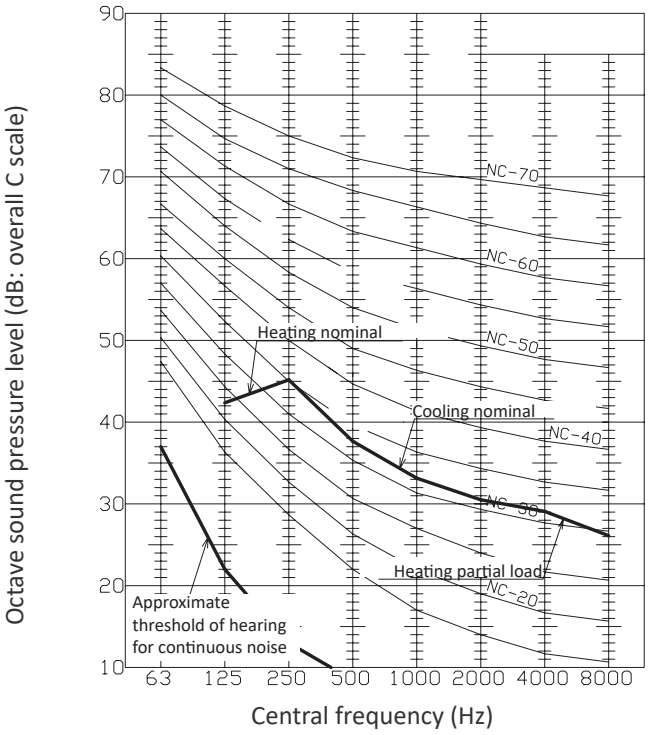

Cooling/Heating nominal: 41/41 dB(A)
Heating partial load: 41 dB(A)

4.2 Considerations for sound pressure level

Distance of the unit from the measuring point: at 1 meter from the unit's front surface; 1.5 meter from floor level.

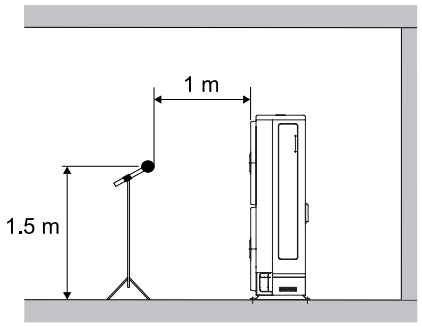

The data is measured in an anechoic chamber, so reflected sound should be taken into consideration when installing the unit.

The sound measured with the curve A shown in dB(A) represents the attenuation in function of frequency as perceived by the human ear.

Reference acoustic pressure 0 dB=20 µPa.

4.3 Sound pressure level

4.3.1 Outdoor units

RASM-2VTW2E

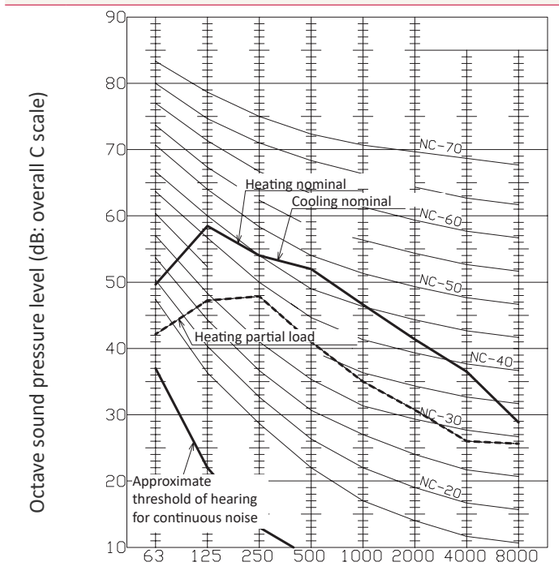

Cooling/Heating nominal: 54/54 dB(A)
Heating partial load: 42 dB(A)

RASM-3VTW2E

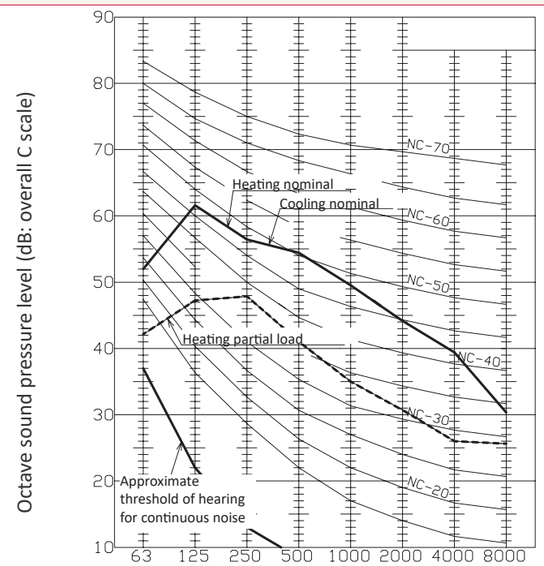

Cooling/Heating nominal: 55/55 dB(A)
Heating partial load: 42 dB(A)

RASM-3.5VTW2E

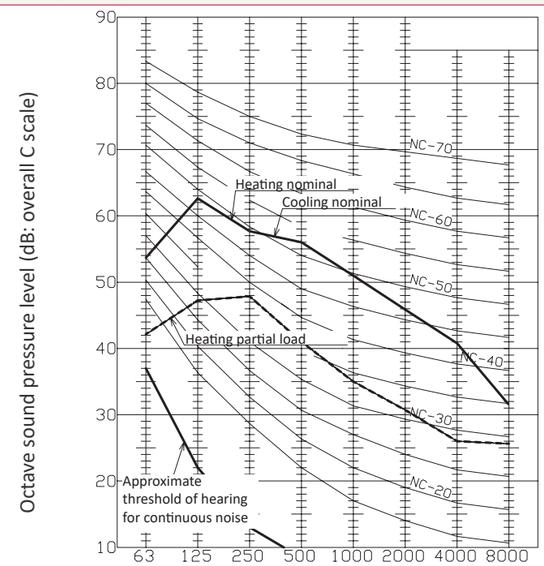

Cooling/Heating nominal: 56/56 dB(A)
Heating partial load: 42 dB(A)

RASM-4(V)TW2E

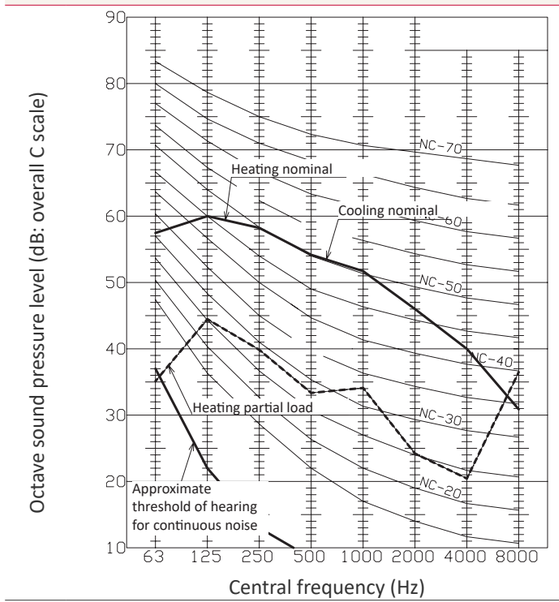

Cooling/Heating nominal: 57/57 dB(A)
Heating partial load: 41 dB(A)

RASM-5(V)TW2E

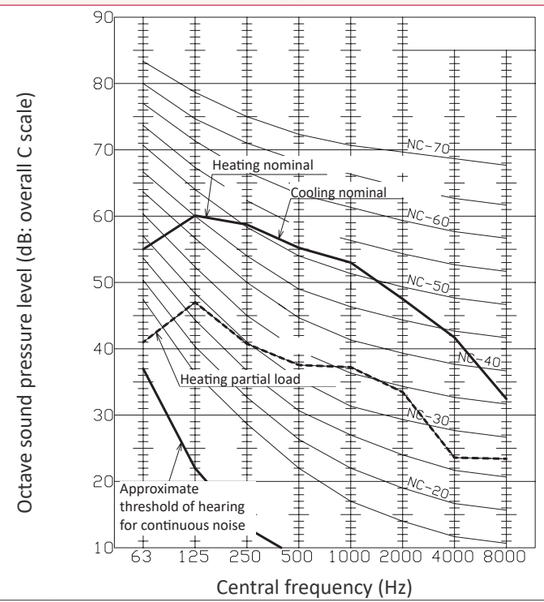

Cooling/Heating nominal: 58/58 dB(A)
Heating part load: 42 dB(A)

RASM-6(V)TW2E

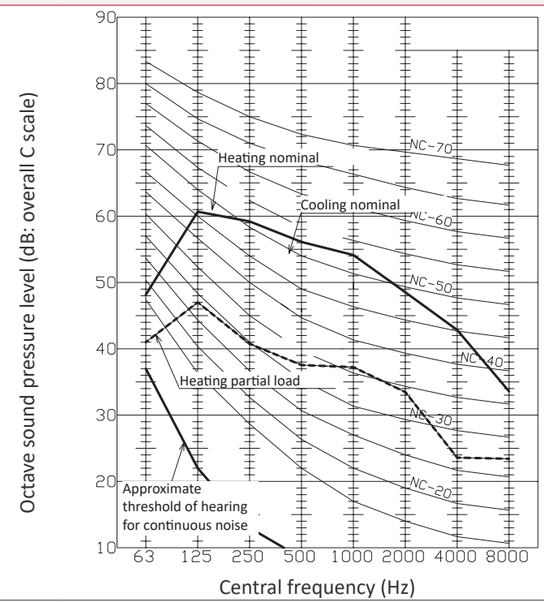

Cooling/Heating nominal: 59/59 dB(A)
Heating part load: 42 dB(A)

4.3.2 Indoor units - Hydrosplit system

HWM-W2E(-B) / HWD-W2E-220S(-K)

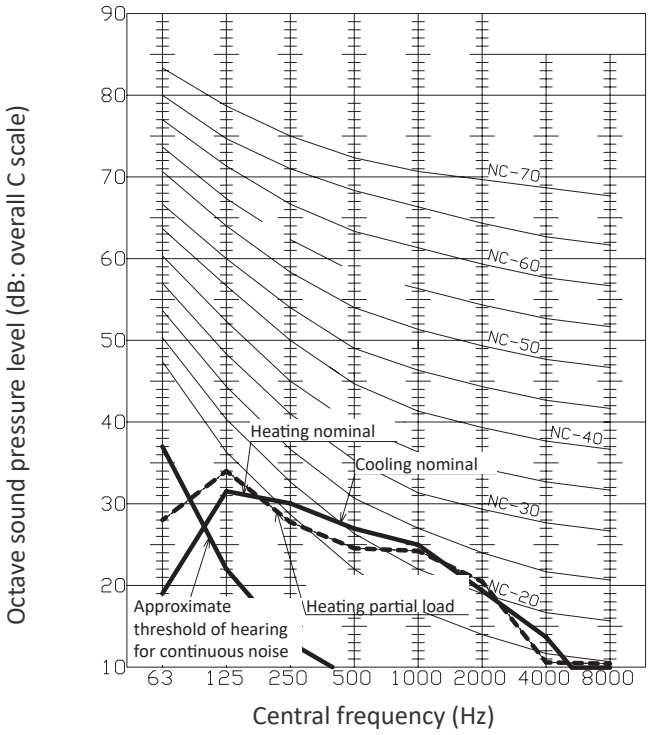

Cooling/Heating: 30/30 dB(A)
Heating partial load: 30 dB(A)

4.4 Sound pressure reduction

4.4.1 Estimated sound reduction based on the outdoor unit distance

Units in dB (A)

		Distance (m)					
Model	Load	1	5	10	20	30	40
RASM-2VTW2E	Heating part load (40%)	43	29	23	17	14	11
	Heating nominal (100%)	53	39	33	27	23	21
	Cooling nominal (100%)	53	39	33	27	23	21
RASM-3VTW2E	Heating part load (40%)	43	29	23	17	14	11
	Heating nominal (100%)	53	39	33	27	23	21
	Cooling nominal (100%)	53	39	33	27	23	21
RASM-3.5VTW2E	Heating part load (40%)	43	29	23	17	14	11
	Heating nominal (100%)	53	39	33	27	23	21
	Cooling nominal (100%)	53	39	33	27	23	21
RASM-4(V)TW2E	Heating part load (40%)	41	27	21	15	12	9
	Heating nominal (100%)	57	43	37	31	27	25
	Cooling nominal (100%)	57	43	37	31	27	25
RASM-5(V)TW2E	Heating part load (40%)	42	28	22	16	12	10
	Heating nominal (100%)	58	44	38	32	28	26
	Cooling nominal (100%)	58	44	38	32	28	26
RASM-6(V)TW2E	Heating part load (40%)	42	28	22	16	12	10
	Heating nominal (100%)	59	45	39	33	29	27
	Cooling nominal (100%)	59	45	39	33	29	27

4.4.2 Estimated sound reduction based on night shift function

The following values are based on the night shift settings from the remote control.

Units in dB (A)

	Night shift setting				
Model	40%	55%	75%	90%	100%
RASM-2VTW2E	43	46	49	51	53
RASM-3VTW2E	43	46	49	51	53
RASM-3.5VTW2E	43	46	49	51	53
RASM-4(V)TW2E	41	45	50	54	57
RASM-5(V)TW2E	42	46	51	55	58
RASM-6(V)TW2E	42	46	52	56	59

4.5 Sound power reduction

4.5.1 Estimated sound reduction based on night shift function

The following values are based on the night shift settings from the remote control.

Units in dB (A)

	Night shift setting				
Model	40%	55%	75%	90%	100%
RASM-2VTW2E	55	57	59	61	62
RASM-3VTW2E	56	58	60	62	63
RASM-3.5VTW2E	57	59	62	64	65
RASM-4(V)TW2E	53	55	58	60	61
RASM-5(V)TW2E	53	55	58	61	62
RASM-6(V)TW2E	53	56	59	61	63

Working range

5.1 Power supply working range 58
5.2 Temperature working range 58
5.2.1 Space heating 59
5.2.2 DHW 59
5.2.3 Swimming pool heating 60
5.2.4 Space cooling (necessary cooling kit) 60
5.3 R290 hydraulic working range 61
5.3.1 Hydraulic data 61
5.3.2 Minimum installation water volume 61
5.3.3 Pump performance curves 62

5.1 Power supply working range

◆ Nominal power supply

- Single phase: ~ 230 V 50 Hz
- Three phase: 3N~ 400 V 50 Hz

◆ Operating voltage

Between 90% and 110% of the nominal voltage.

◆ Voltage imbalance for nominal power supply 3N~ 400 V 50 Hz

Up to 3% of each phase, measured at the main terminal of the outdoor unit.

◆ Starting voltage

Always higher than 85% of the nominal voltage.

◆ Relative humidity limit

Lower than 80%.

5.2 Temperature working range

MODEL		2.0 HP	3.0 HP	3.5 HP	4.0 HP	5.0 HP	6.0 HP
Water temperature	°C	Refer to the graphics for each case					
Indoor ambient temperature		5~30					

5.2.1 Space heating

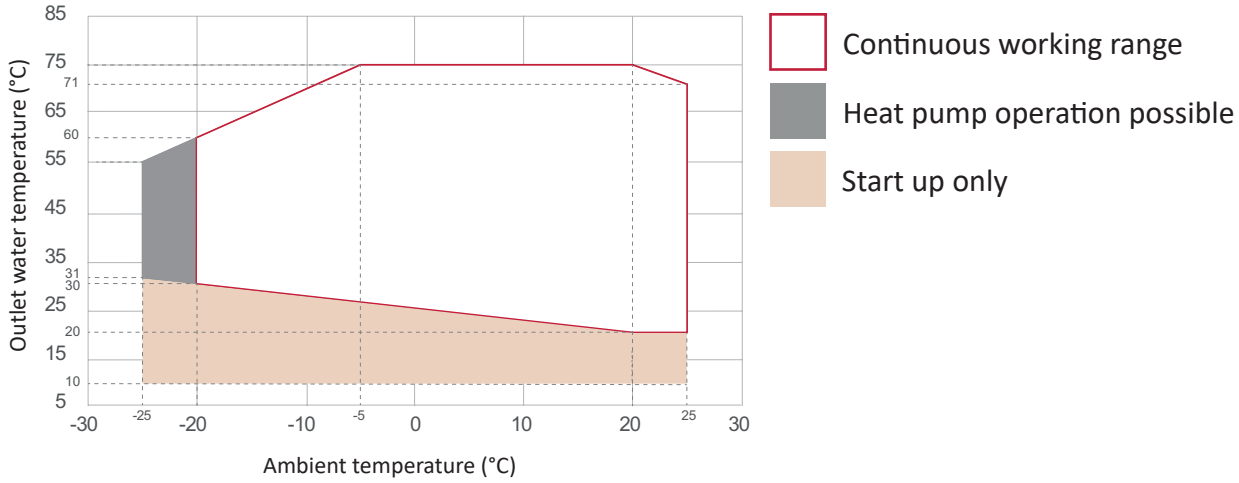

5.2.2 DHW

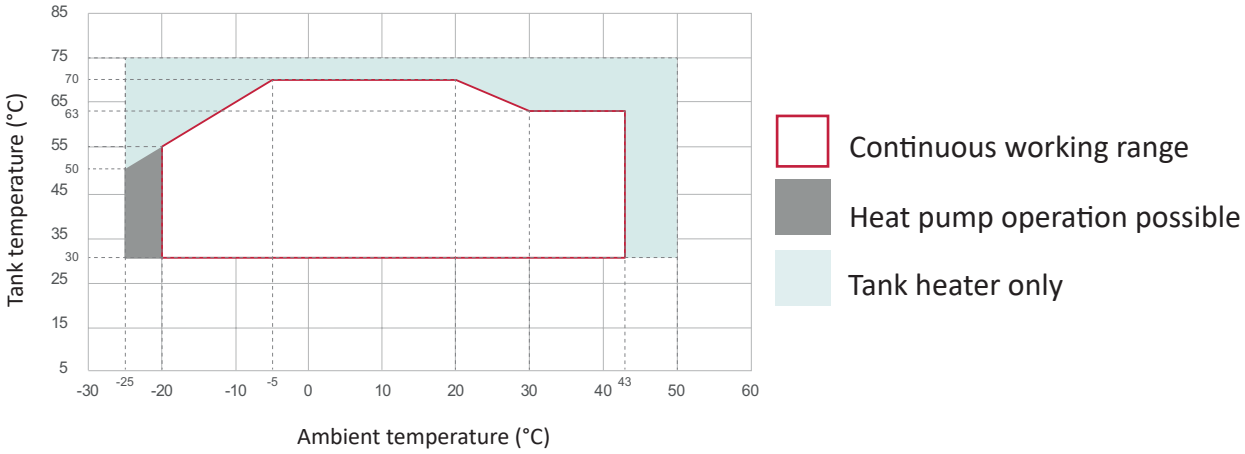

NOTE

In case of heating up the DHW tank with an outdoor ambient temperature lower than -5°C and without using the DHW electrical heater, the setting temperature will change automatically in order to not exceed the maximum value in the specified continuous working range.

5.2.3 Swimming pool heating

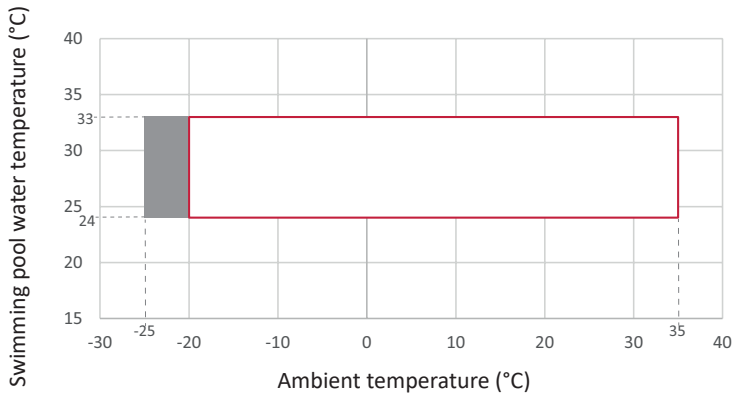

Continuous working range

Heat pump operation possible

5.2.4 Space cooling (necessary cooling kit)

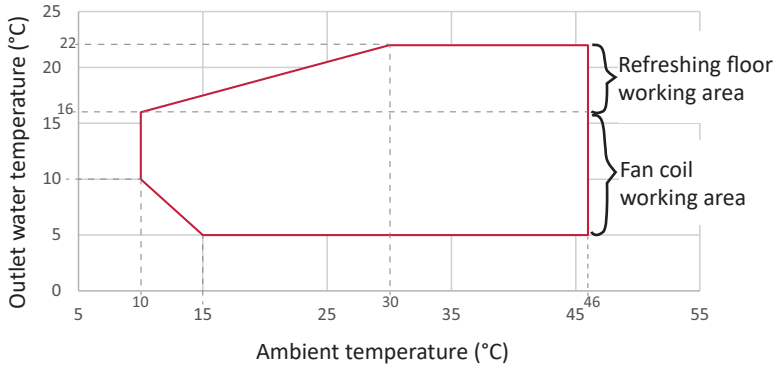

Continuous working range

5.3 R290 hydraulic working range

5.3.1 Hydraulic data

◆ Outdoor unit - Control Box system / Hydrosplit system

MODEL		2.0 HP	3.0 HP	3.5 HP	4.0 HP	5.0 HP	6.0 HP
Minimum water flow rate (*1)	m^3/h	0.8	0.8	1.0	1.0	1.1	1.2
Maximum water flow rate (*1)	m^3/h	2	2	2	3	3	3
Minimum allowable water pressure (*2)	MPa	0.1	0.1	0.1	0.1	0.1	0.1
Maximum allowable water pressure (*2)	MPa	0.25	0.25	0.25	0.25	0.25	0.25

*(*1): Values calculated based on the following conditions: Water inlet/outlet temperature: 30/35°C, Outdoor ambient temperature: (DB/WB): 7/6°C.*

*(*2): Values measured on the outdoor unit, where the pressure relief valve is situated.*

◆ Indoor units - Hydrosplit system

MODEL		2.0 HP	3.0 HP	3.5 HP	4.0 HP	5.0 HP	6.0 HP
Minimum water flow rate (*1)	m^3/h	0.6	0.6	0.6	0.6	0.6	0.6
Maximum water flow rate (*1)	m^3/h	2	2	2	3	3	3
Minimum allowable water pressure (*2)	MPa	0.1	0.1	0.1	0.1	0.1	0.1
Maximum allowable water pressure (*2)	MPa	0.25	0.25	0.25	0.25	0.25	0.25

*(*1): Values calculated based on the following conditions: Water inlet/outlet temperature: 30/35°C, Outdoor ambient temperature: (DB/WB): 7/6°C.*

*(*2): Values measured on the outdoor unit, where the pressure relief valve is situated.*

5.3.2 Minimum installation water volume

NOTE

When installing fan coils, respect the minimum water volumes.

◆ Hydrosplit system - airH2O 800M + airH2O 800H / airH2O 800H Combi

MODEL		2.0 HP	3.0 HP	3.5 HP	4.0 HP	5.0 HP	6.0 HP
Minimum installation water volume	L	13	13	13	45	45	45
Equivalent radiant floor area (*1)	m^2	13	13	13	45	45	45
Equivalent radiator number (*2)	u	3	3	3	9	9	9

*(*1): Estimated radiant floor surface to accomplish minimum installation water volume requirement considering 16 mm diameter with 200 mm of spacing (1 L equals to 1 m^2).*

*(*2): Estimated number of radiators considering aluminium radiator of 80 mm spacing with 600 mm height and 1000 mm length (1 radiator equals to 4.7 L). For different radiator type use Hi-Tool Kit website to check volumes.*

◆ Control Box system - airH2O 800M + Control Box

MODEL		2.0 HP	3.0 HP	3.5 HP	4.0 HP	5.0 HP	6.0 HP
Minimum installation water volume	L	28	28	28	55	55	55
Equivalent radiant floor area (*1)	m^2	28	28	28	55	55	55
Equivalent radiator number (*2)	u	6	6	6	12	12	12

*(*1): Estimated radiant floor surface to accomplish minimum installation water volume requirement considering 16 mm diameter with 200 mm of spacing (1 L equals to 1 m^2).*

*(*2): Estimated number of radiators considering aluminium radiator of 80 mm spacing with 600 mm height and 1000 mm length (1 radiator equals to 4.7 L). For different radiator type use Hi-Tool Kit website to check volumes.*

5.3.3 Pump performance curves

Operate the pump within the minimum and maximum water flow of the indoor and outdoor units following the tables below.

NOTE

When a water flow rate is out of the working range of the unit, it can cause malfunction on the unit.

◆ Outdoor unit - Control Box system / Hydrosplit system

In case of using hydraulic modules, available pressure shown is considering a pipe length of 0 m between outdoor and indoor units. Use the following curves to size the installation between the outdoor and the indoor units:

airH2O 800M	
2 - 3.5 HP	4 - 6 HP

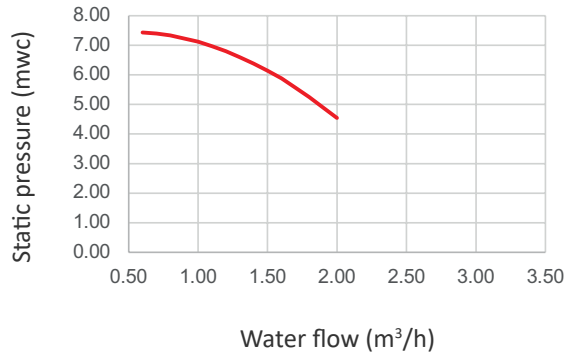

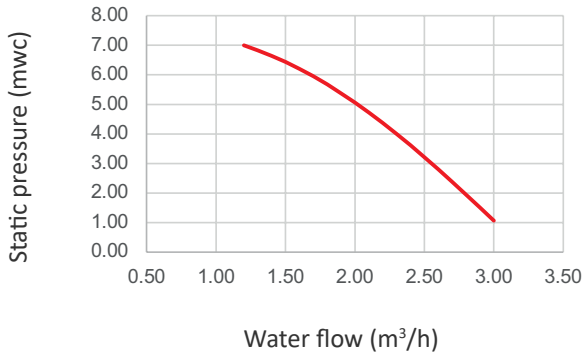

◆ Indoor units - Hydrosplit system

Use the following curves to size the installation between the indoor unit and the final heating/ cooling appliances:

airH2O 800H

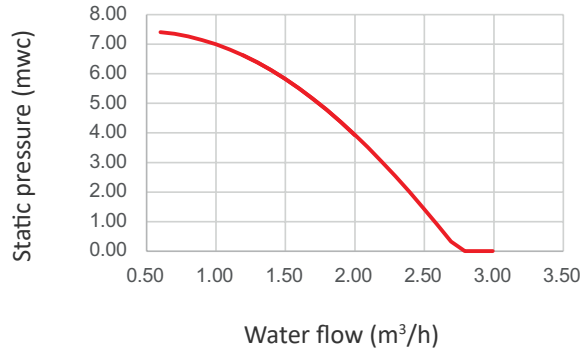

airH2O 800H Combi

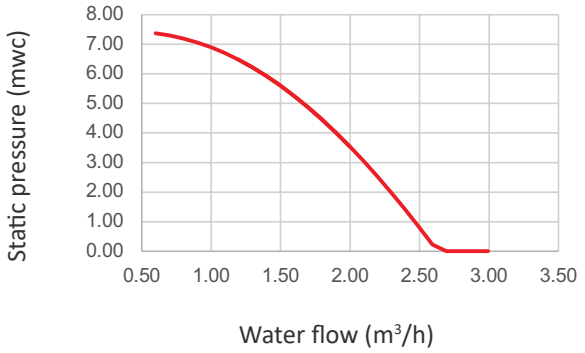

NOTE

Maximum water flow shall never be greater than the specific outdoor unit maximum water flow.

General dimensions

6.1 Name of parts and dimensional data 65
6.1.1 Outdoor units 65
6.1.2 Indoor units- Hydrosplit system 67
6.1.3 Indoor units- Control Box system 71
6.1.4 Indoor units- Complementary system 72
6.2 Service space 73
6.2.1 Outdoor units 73
6.2.2 Indoor units- Hydrosplit system 73
6.2.3 Indoor units- Control Box system 75
6.2.4 Indoor units- Complementary system 75

6.1 Name of parts and dimensional data

6.1.1 Outdoor units

◆ **airH2O 800M - RASM-(2-3.5)VTW2E**

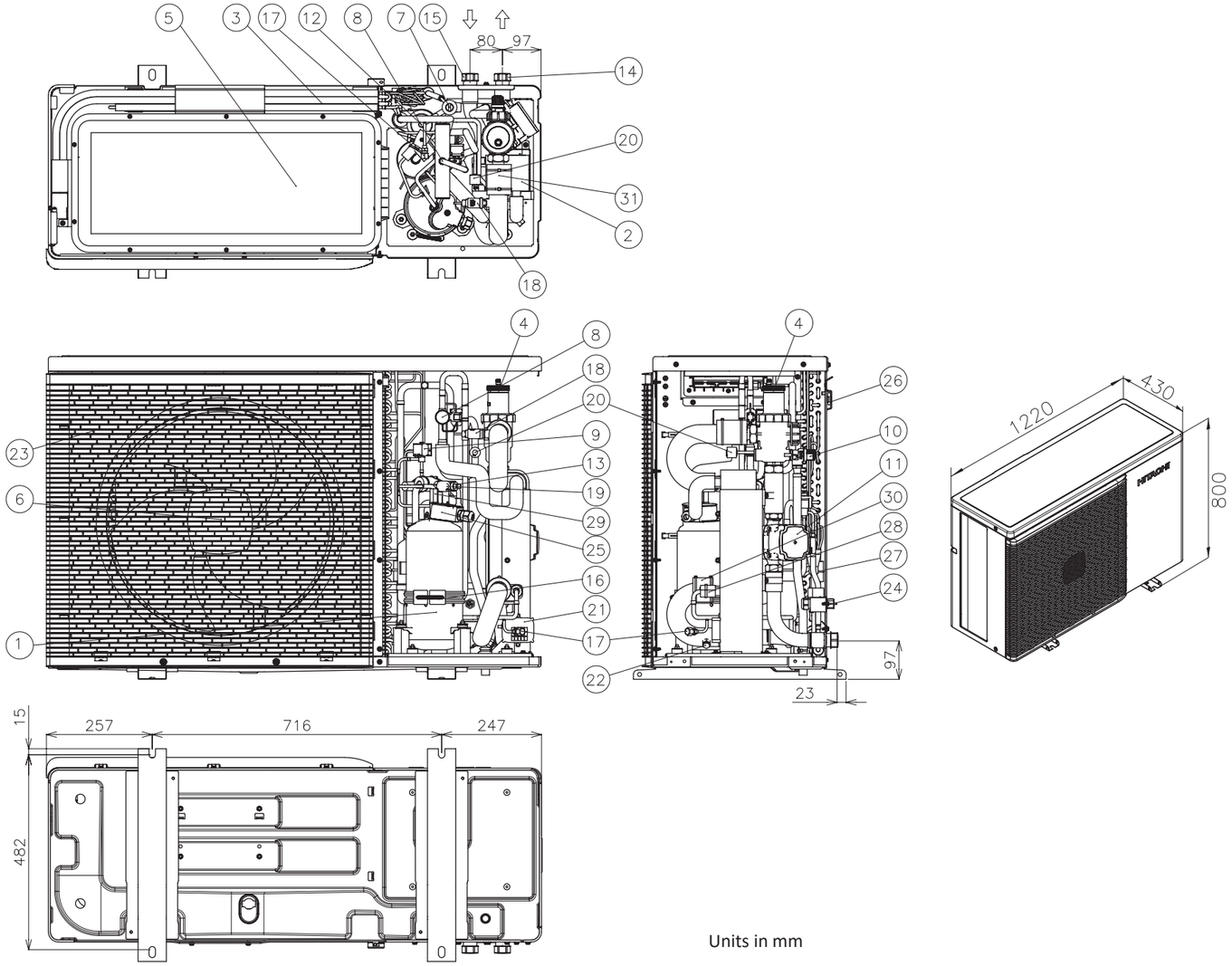

Units in mm

1. Compressor
2. Water side heat exchanger
3. Air side exchanger
4. Degasser
5. Electrical box
6. Fan
7. Expansion valve
8. Reversing valve
9. Solenoid valve (SVA)
10. Safety valve (2.5 Bar)
11. Water pump
12. Receiver
13. High pressure switch (HPS)
14. Water outlet (1”)
15. Water inlet (1”)
16. Compressor heater
17. Service valve
18. Water pressure sensor
19. Sensor for refrigerant pressure (Pd)
20. Sensor for refrigerant pressure (Ps)
21. Refrigerant leak sensor
22. Drain valve
23. Protector grill
24. Power source & H-LINK connectors
25. Klixon (top temperature protection)
26. Ta thermistor (ambient)
27. Te thermistor (evaporation)
28. Tl thermistor (liquid refrigerant pipe in heating)
29. Td thermistor (compressor discharge)
30. Twi thermistor (water inlet pipe)
31. Two thermistor (water outlet pipe)

◆ airH2O 800M - RASM-(4-6)(V)TW2E

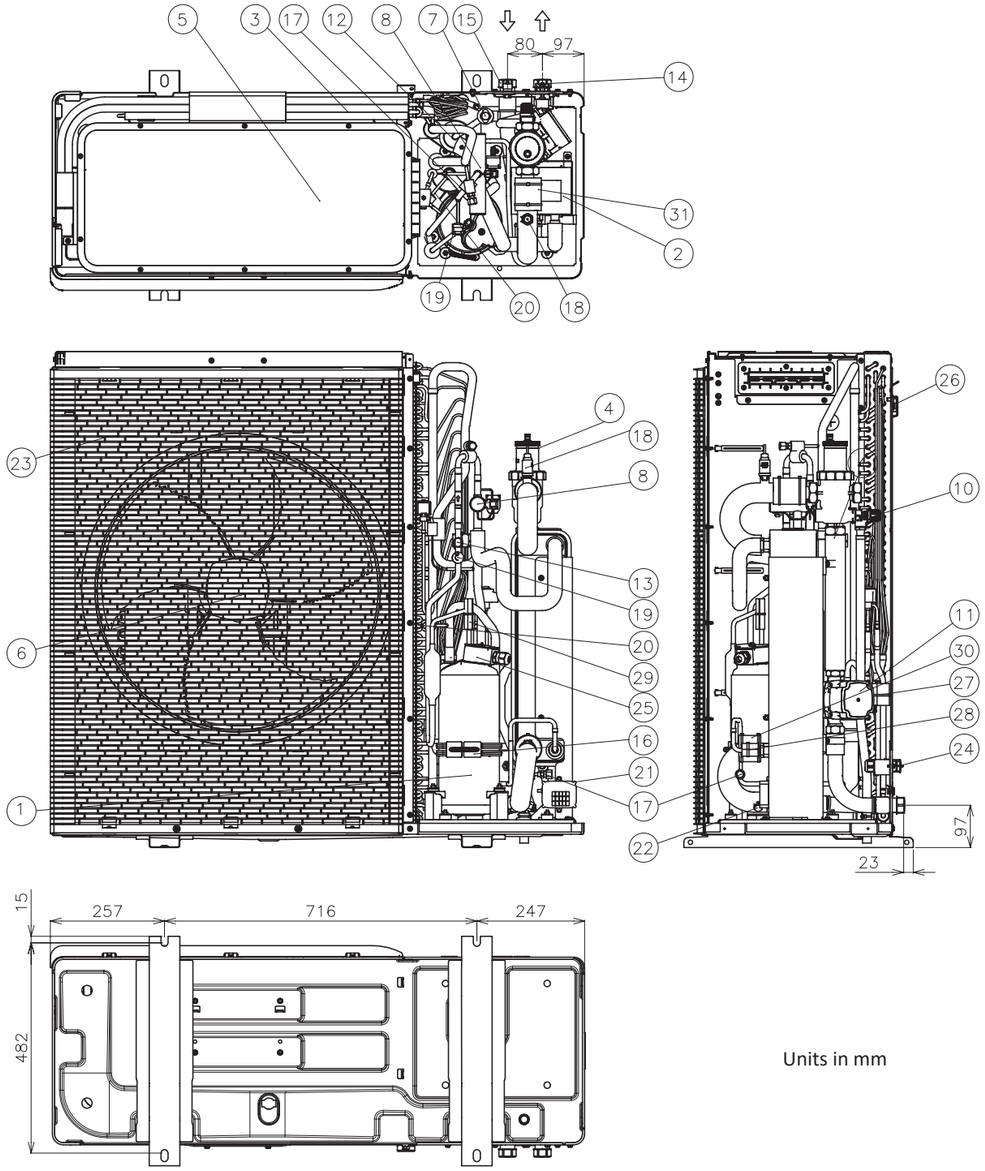

Units in mm

1. Compressor
2. Water side heat exchanger
3. Air side exchanger
4. Degasser
5. Electrical box
6. Fan
7. Expansion valve
8. Reversing valve
9. Solenoid valve (SVA)
10. Safety valve (2.5 Bar)
11. Water pump
12. Receiver
13. High pressure switch (HPS)
14. Water outlet (1”)
15. Water inlet (1”)
16. Compressor heater
17. Service valve
18. Water pressure sensor
19. Sensor for refrigerant pressure (Pd)
20. Sensor for refrigerant pressure (Ps)
21. Refrigerant leak sensor
22. Drain valve
23. Protector grill
24. Power source & H-LINK connectors
25. Klixon (top temperature protection)
26. Ta thermistor (ambient)
27. Te thermistor (evaporation)
28. Tl thermistor (liquid refrigerant pipe in heating)
29. Td thermistor (compressor discharge)
30. Twi thermistor (water inlet pipe)
31. Two thermistor (water outlet pipe)

6.1.2 Indoor units - Hydrosplit system

◆ airH2O 800H - HWM-W2E

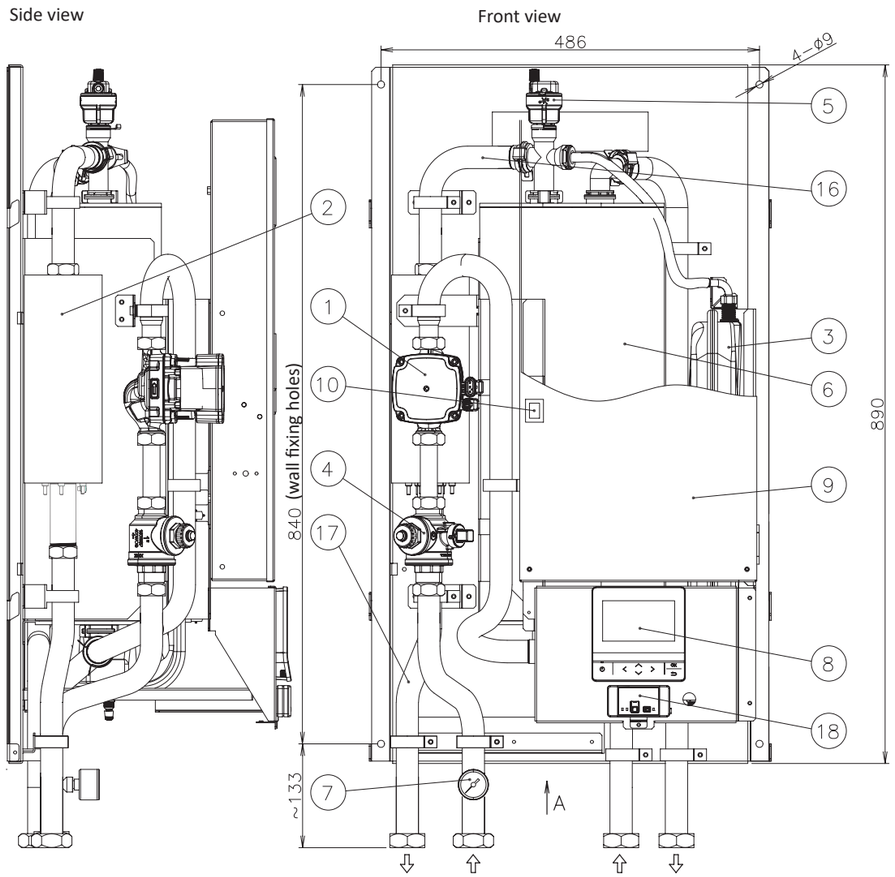

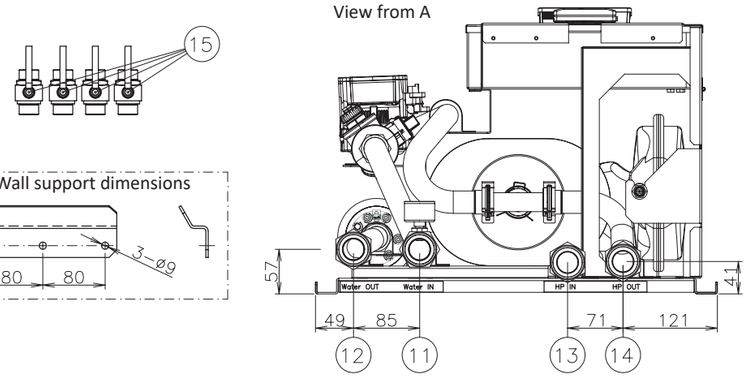

1. Water pump
2. Electric water heater
3. Expansion vessel (6 L)
4. Water strainer
5. Air purger
6. Hydraulic separator and buffer tank
7. Manometer
8. Unit controller
9. Electrical box
10. Switch for DHW emergency operation
11. Space inlet pipe connection (G 1” female)
12. Space outlet pipe connection - (G 1” female)
13. HP inlet pipe connection - (G 1” female)
14. HP outlet pipe connection - (G 1” female)
15. Shutdown valve (factory-supplied accessory)
16. Thermistor (water out HP)
17. Thermistor (water out)
18. IOT gateway

NOTE

⇦ Water flow direction

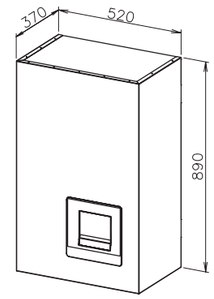

Units in mm

◆ airH2O 800H - HWM-W2E-B

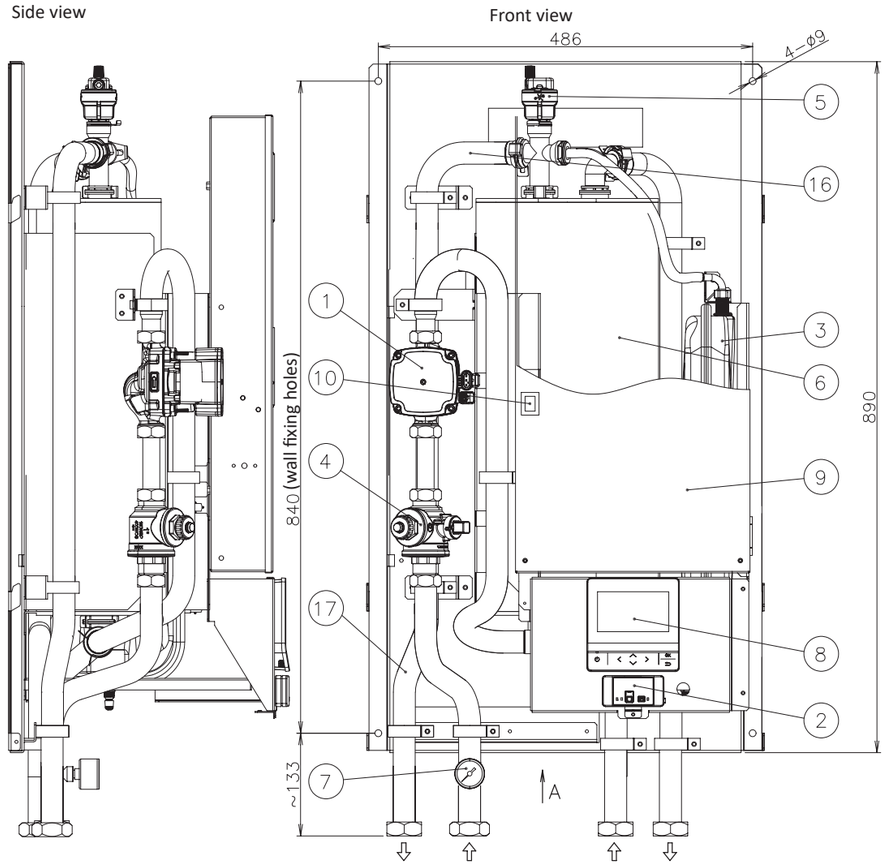

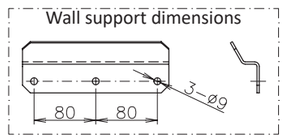

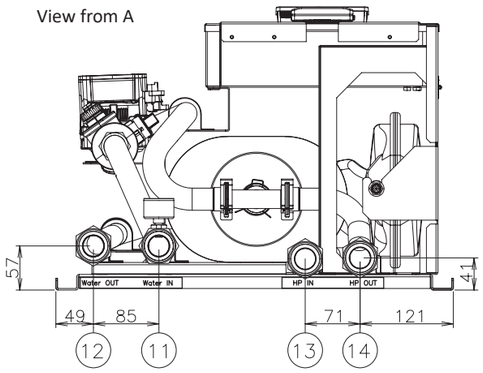

NOTE

⇦ Water flow direction

Units in mm

1. Water pump
2. IOT gateway
3. Expansion vessel (6 L)
4. Water strainer
5. Air purger
6. Hydraulic separator and buffer tank
7. Manometer
8. Unit controller
9. Electrical box
10. Switch for DHW emergency operation
11. Space inlet pipe connection (G 1” female)
12. Space outlet pipe connection - (G 1” female)
13. HP inlet pipe connection - (G 1” female)
14. HP outlet pipe connection - (G 1” female)
15. Shutdown valve (factory-supplied accessory)
16. Thermistor (water out HP)
17. Thermistor (water out)

◆ airH2O 800H Combi - HWD-W2E-220S

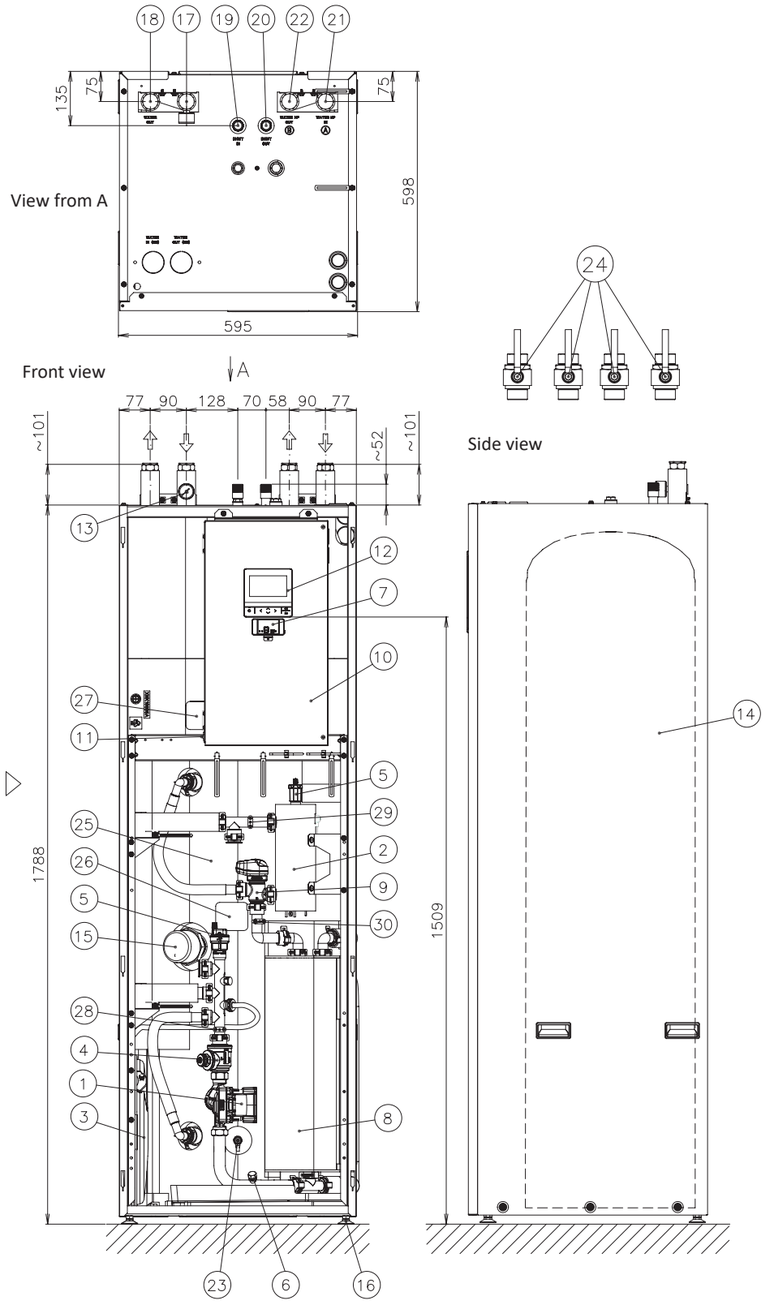

NOTE

Water flow direction

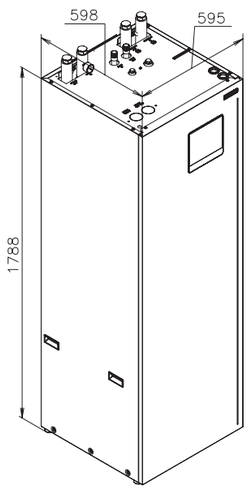

Units in: mm

1. Water pump
2. Electric water heater
3. Expansion vessel (6 L)
4. Water strainer
5. Air purger (x2)
6. Drain port (for unit) (G 3/8”)
7. IOT gateway
8. Hydraulic separator and buffer tank
9. 3-way valve (for space heating and DHW)
10. Electrical box
11. Switch for DHW emergency operation
12. LCD controller
13. Manometer
14. DHW tank (220 L)
15. DHW tank heater+thermostat
16. Mounting foot (x4)
17. Water inlet pipe connection (G 1” female)
18. Water outlet pipe connection (G 1” female)
19. DHW inlet pipe connection (G 3/4” male)
20. DHW outlet pipe connection (G 3/4” male)
21. Water HP inlet connection (G 1” female)
22. Water HP outlet connection (G 1” female)
23. Drain port (for DHW) (G 3/8”)
24. Shutdown valve (factory supplied accessory)
25. Tank insulation
26. DHW thermistor 1 (down)
27. DHW thermistor 2 (up)
28. Water inlet thermistor (THMwi)
29. Water outlet thermistor (THMwo)
30. Water heat pump thermistor (THMwohp)

◆ airH2O 800H Combi - HWD-W2E-220S-K

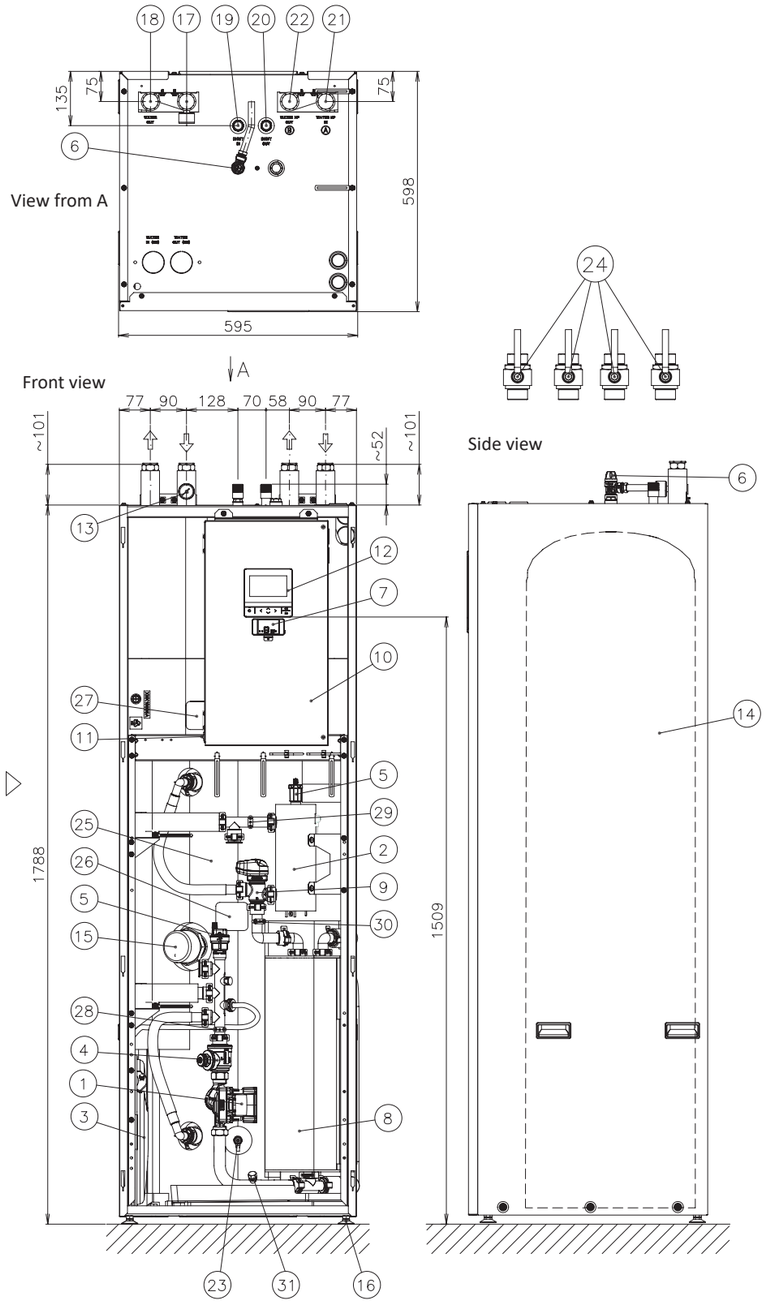

NOTE

Water flow direction



Units in: mm

1. Water pump
2. Electric water heater
3. Expansion vessel (6 L)
4. Water strainer
5. Air purger (x2)
6. Pressure and temperature valve
7. IOT gateway
8. Hydraulic separator and buffer tank
9. 3-way valve (for space heating and DHW)
10. Electrical box
11. Switch for DHW emergency operation
12. LCD controller
13. Manometer
14. DHW tank (220 L)
15. DHW tank heater+thermostat
16. Mounting foot (x4)
17. Water inlet pipe connection (G 1” female)
18. Water outlet pipe connection (G 1” female)
19. DHW inlet pipe connection (G 3/4” male)
20. DHW outlet pipe connection (G 3/4” male)
21. Water HP inlet connection (G 1” female)
22. Water HP outlet connection (G 1” female)
23. Drain port (for DHW) (G 3/8”)
24. Shutdown valve (factory supplied accessory)
25. Tank insulation
26. DHW thermistor 1 (down)
27. DHW thermistor 2 (up)
28. Water inlet thermistor (THMwi)
29. Water outlet thermistor (THMwo)
30. Water heat pump thermistor (THMwohp)
31. Drain port (for unit) (G 3/8”)

6.1.3 Indoor units - Control Box system

◆ Control Box - ATW-CBX-01

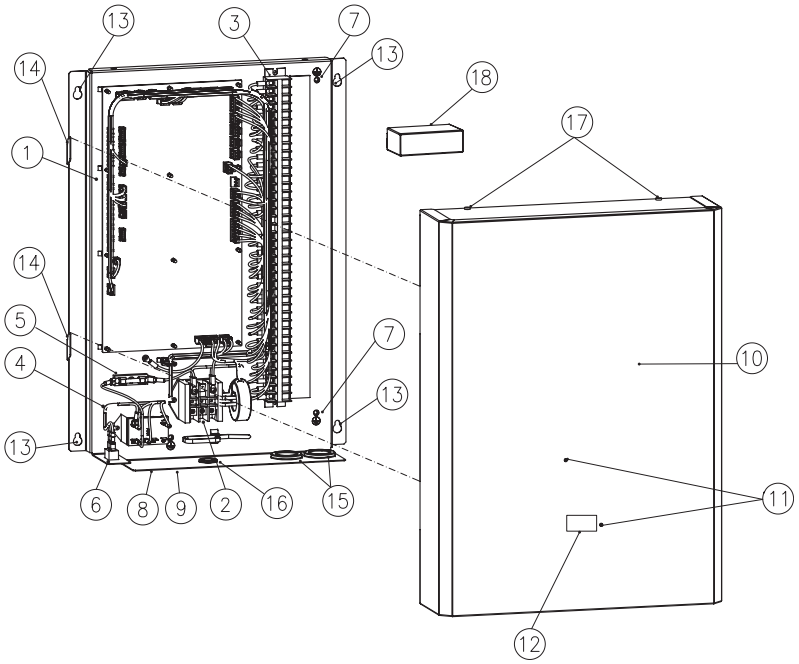

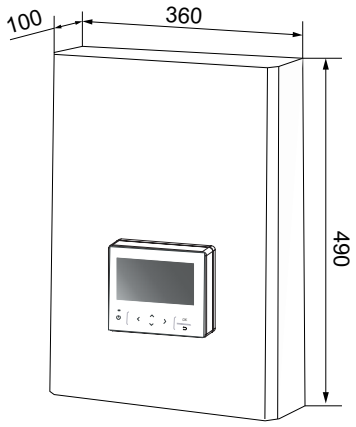

Units: mm

1. Electrical box
2. Terminal Board (TB1)
3. Terminal Board (TB2)
4. Relay (AR1)
5. Fuse (EF1) and fuse holder
6. Switch for DHW emergency operation
7. Earth screw
8. Model label (bottom)
9. Electrical data label (bottom)
10. Service cover
11. LCD unit controller assembly holes (x2)
12. LCD unit controller routing hole
13. Wall mounting holes (x4)
14. Service cover assembly hooks (x2)
15. Rubber bushing for control wiring (x2)
16. Rubber bushing for power supply wiring
17. Service cover fixation screws (x2)
18. IOT device

6.1.4 Indoor units - Complementary system

◆ Cascade Controller - ATW-YCC-04

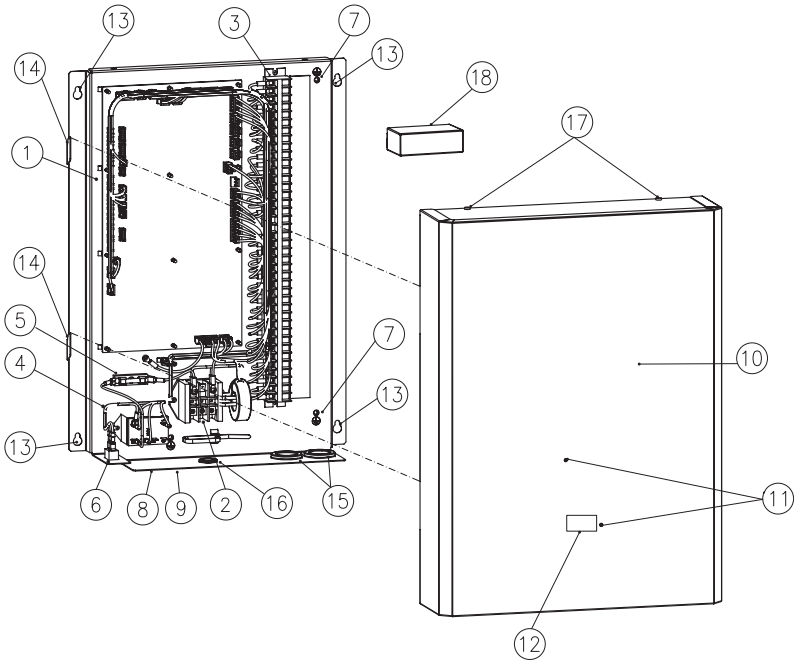

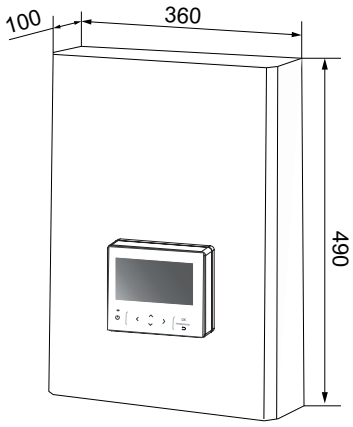

Units: mm

1. Electrical box
2. Terminal Board (TB1)
3. Terminal Board (TB2)
4. Relay (AR1)
5. Fuse (EF1) and fuse holder
6. Switch for DHW emergency operation
7. Earth screw
8. Model label (bottom)
9. Electrical data label (bottom)
10. Service cover
11. LCD unit controller assembly holes (x2)
12. LCD unit controller routing hole
13. Wall mounting holes (x4)
14. Service cover assembly hooks (x2)
15. Rubber bushing for control wiring (x2)
16. Rubber bushing for power supply wiring
17. Service cover fixation screws (x2)
18. IOT device

6.2 Service space

6.2.1 Outdoor units

◆ airH2O 800M - RASM-(2-6)(V)TW2E

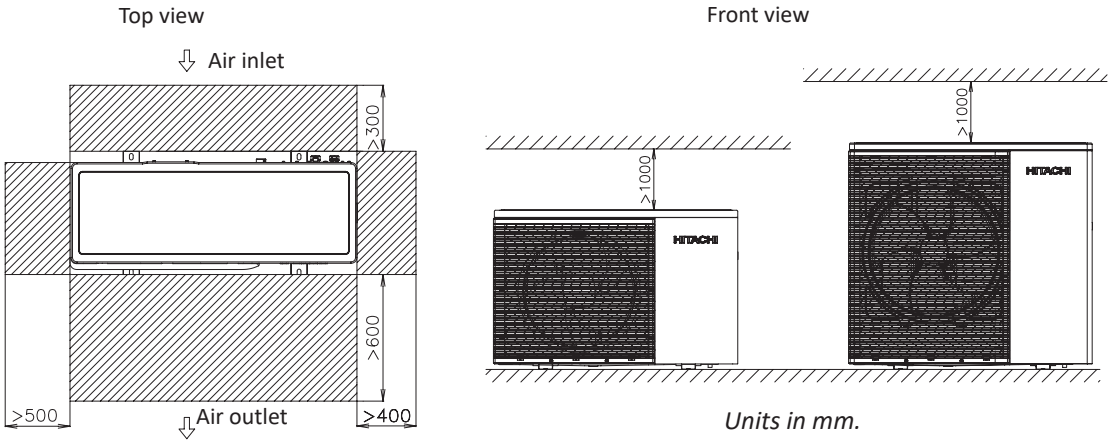

Units in mm.

6.2.2 Indoor units - Hydrosplit system

◆ airH2O 800H - HWM-W2E(-B)

H: 1200 mm ~ 1500 mm

Recommended unit height for proper access to the control unit panel (unit controller).

h: 350 mm

Minimum unit height for installing the shut-off valves and the first bending pipe line.

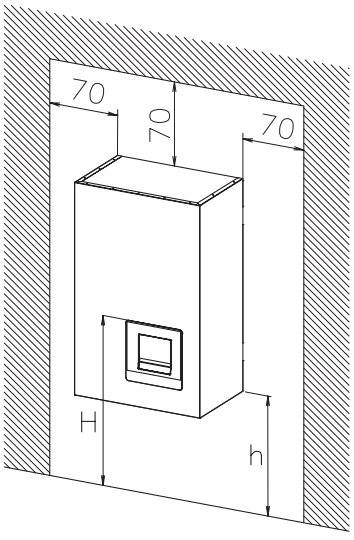

Units in mm.

◆ airH2O 800H Combi - HWD-W2E-220S(-K)

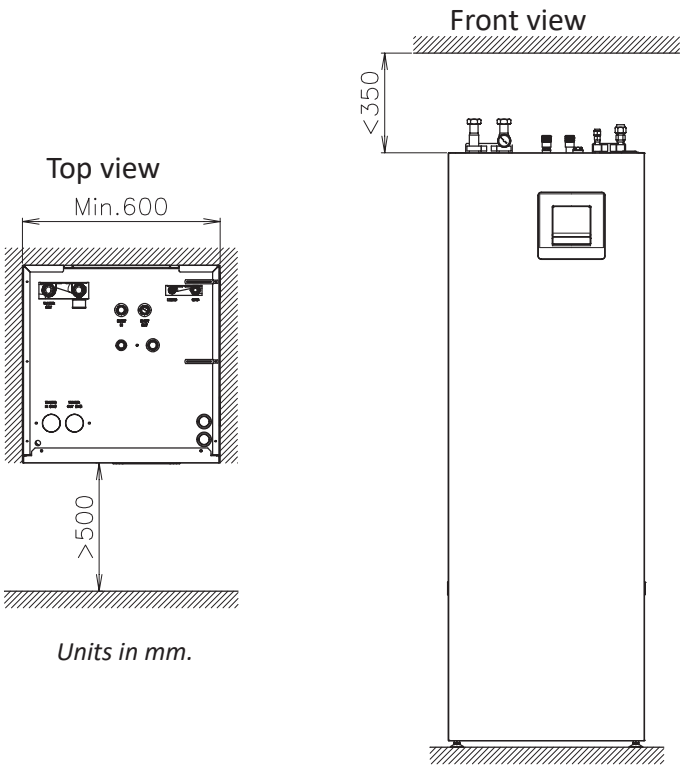

Units in mm.

6.2.3 Indoor units - Control Box system

◆ Control Box - ATW-CBX-01

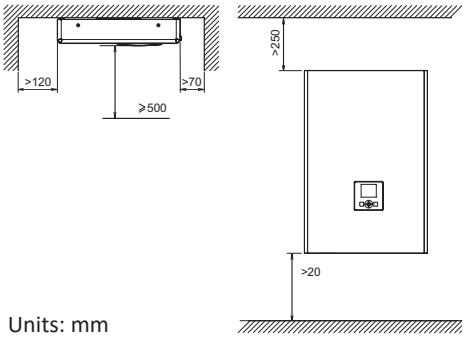

Units: mm

Keep a minimum
distance for the installation of cables

Examples for placement

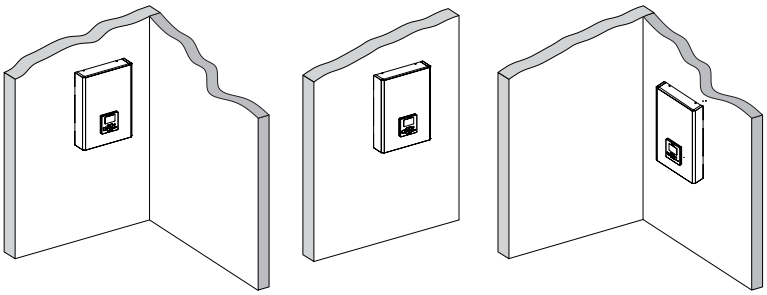

6.2.4 Indoor units - Complementary system

◆ Cascade Controller - ATW-YCC-04

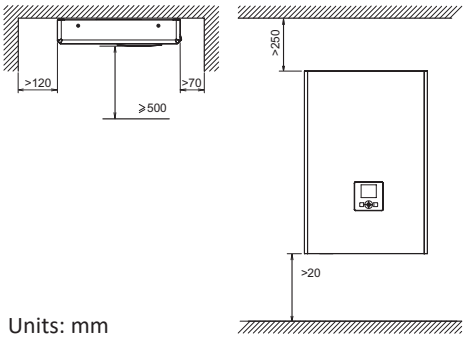

Units: mm

Keep a minimum
distance for the installation of cables

Examples for placement

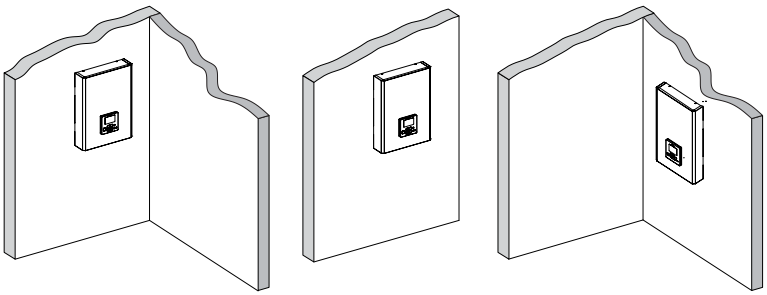

Refrigerant cycle and hydraulic circuit

7.1 Outdoor units 77

7.1.1 **airH2O 800M**- RASM-(2-3.5)VTW2E 77

7.1.2 **airH2O 800M**- RASM-(4-6)(V)TW2E 78

7.2 Indoor units- Hydrosplit system 79

7.2.1 **airH2O 800H**- HWM-W2E 79

7.2.2 **airH2O 800H**- HWM-W2E-B 79

7.2.3 **airH2O 800H Combi**- HWD-W2E-220S(-K) 80

7.1 Outdoor units

7.1.1 airH2O 800M - RASM-(2-3.5)VTW2E

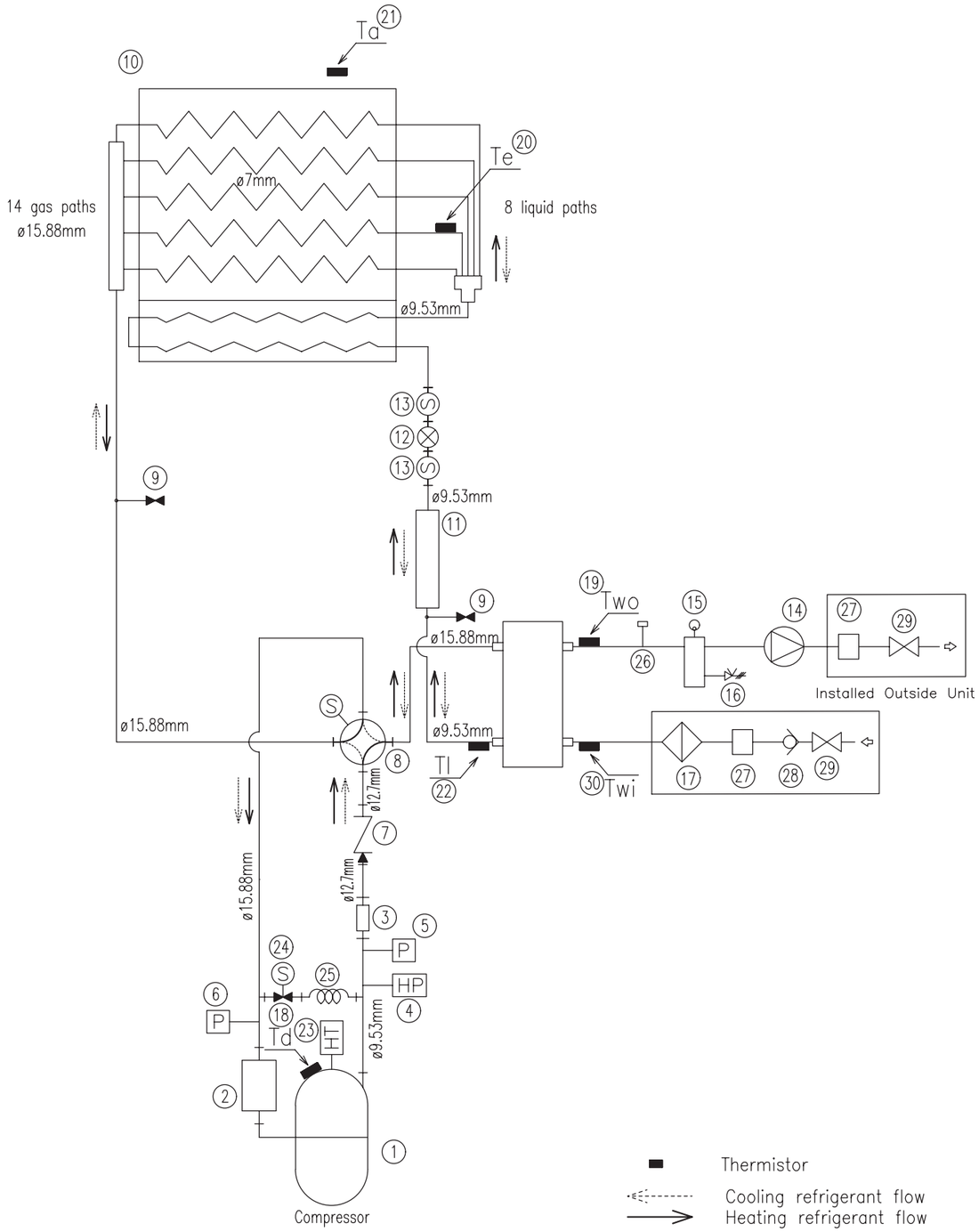

1. Compressor
2. Compressor accumulator
3. Silencer
4. Pressure switch (high pressure)
5. Discharge pressure sensor
6. Suction pressure sensor
7. Check valve
8. 4-way valve
9. Check joint
10. Heat exchanger
11. Receiver
12. Expansion valve
13. Strainer
14. Water pump
15. Degasser
16. Pressure relief valve
17. Water filter
18. Discharge thermistor
19. Outlet water thermistor
20. Evaporation thermistor
21. Ambient thermistor
22. Liquid thermistor
23. HT klixon
24. SVA
25. SVA capillar
26. Water pressure sensor
27. Anti ice valve
28. Anti return valve
29. Ball valve
30. Inlet water thermistor

7.1.2 airH2O 800M - RASM-(4-6)(V)TW2E

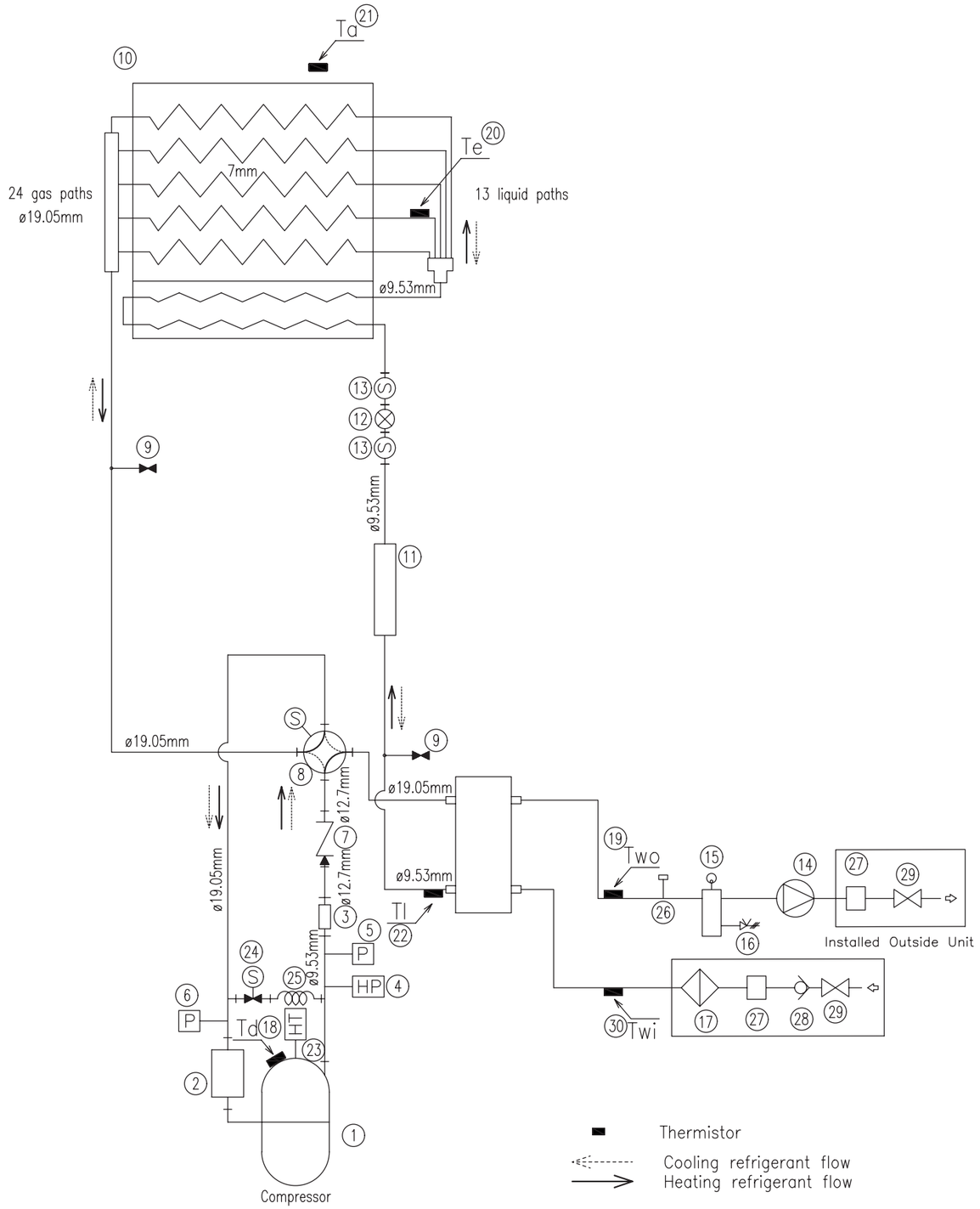

1. Compressor
2. Compressor accumulator
3. Silencer
4. Pressure switch (high pressure)
5. Discharge pressure sensor
6. Suction pressure sensor
7. Check valve
8. 4-way valve
9. Check joint
10. Heat exchanger
11. Receiver
12. Expansion valve
13. Strainer
14. Water pump
15. Degasser
16. Pressure relief valve
17. Water filter
18. Discharge thermistor
19. Outlet water thermistor
20. Evaporation thermistor
21. Ambient thermistor
22. Liquid thermistor
23. HT klixon
24. SVA
25. SVA capillar
26. Water pressure sensor
27. Anti ice valve
28. Anti return valve
29. Ball valve
30. Inlet water thermistor

7.2 Indoor units - Hydrosplit system

7.2.1 airH2O 800H - HWM-W2E

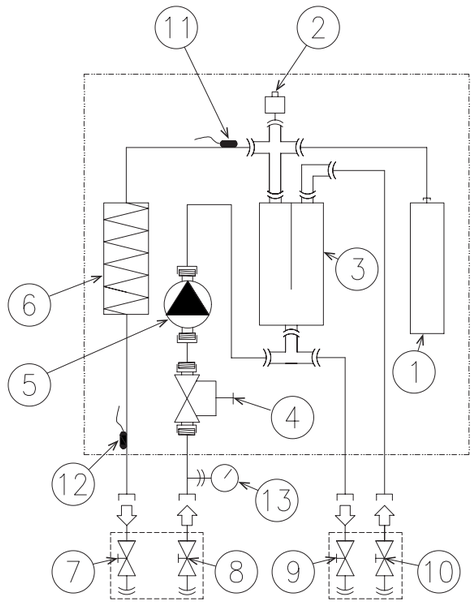

1. Expansion vessel
2. Air purger
3. Hydraulic separator and buffer tank
4. Water strainer
5. Water pump
6. Electric water heater
7. Shutdown valve
8. Shutdown valve
9. Shutdown valve
10. Shutdown valve
11. Thermistor (water out HP)
12. Thermistor (water out)
13. Manometer

NOTE

All pipes: ø28.6 mm (except between "4" and "5", which is ø22 mm)

7.2.2 airH2O 800H - HWM-W2E-B

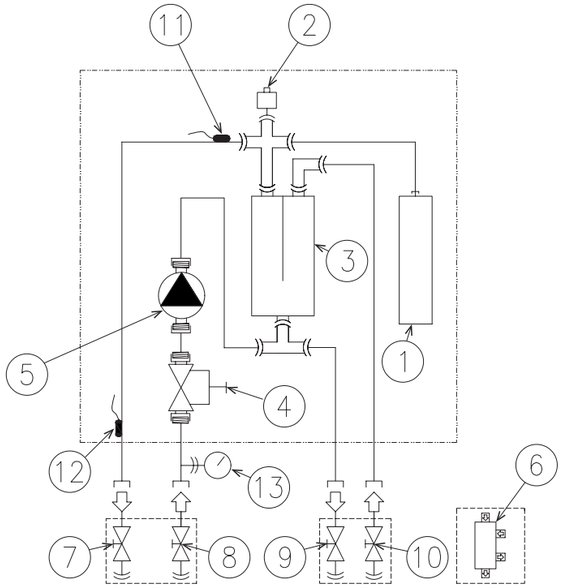

1. Expansion vessel
2. Air purger
3. Hydraulic separator and buffer tank
4. Water strainer
5. Water pump
6. Hydraulic separator (for boiler combination)
7. Shutdown valve
8. Shutdown valve
9. Shutdown valve
10. Shutdown valve
11. Thermistor (water out HP)
12. Thermistor (water out)
13. Manometer

NOTE

All pipes: ø28.6 mm (except between "4" and "5", which is ø22 mm)

7.2.3 airH2O 800H Combi - HWD-W2E-220S(-K)

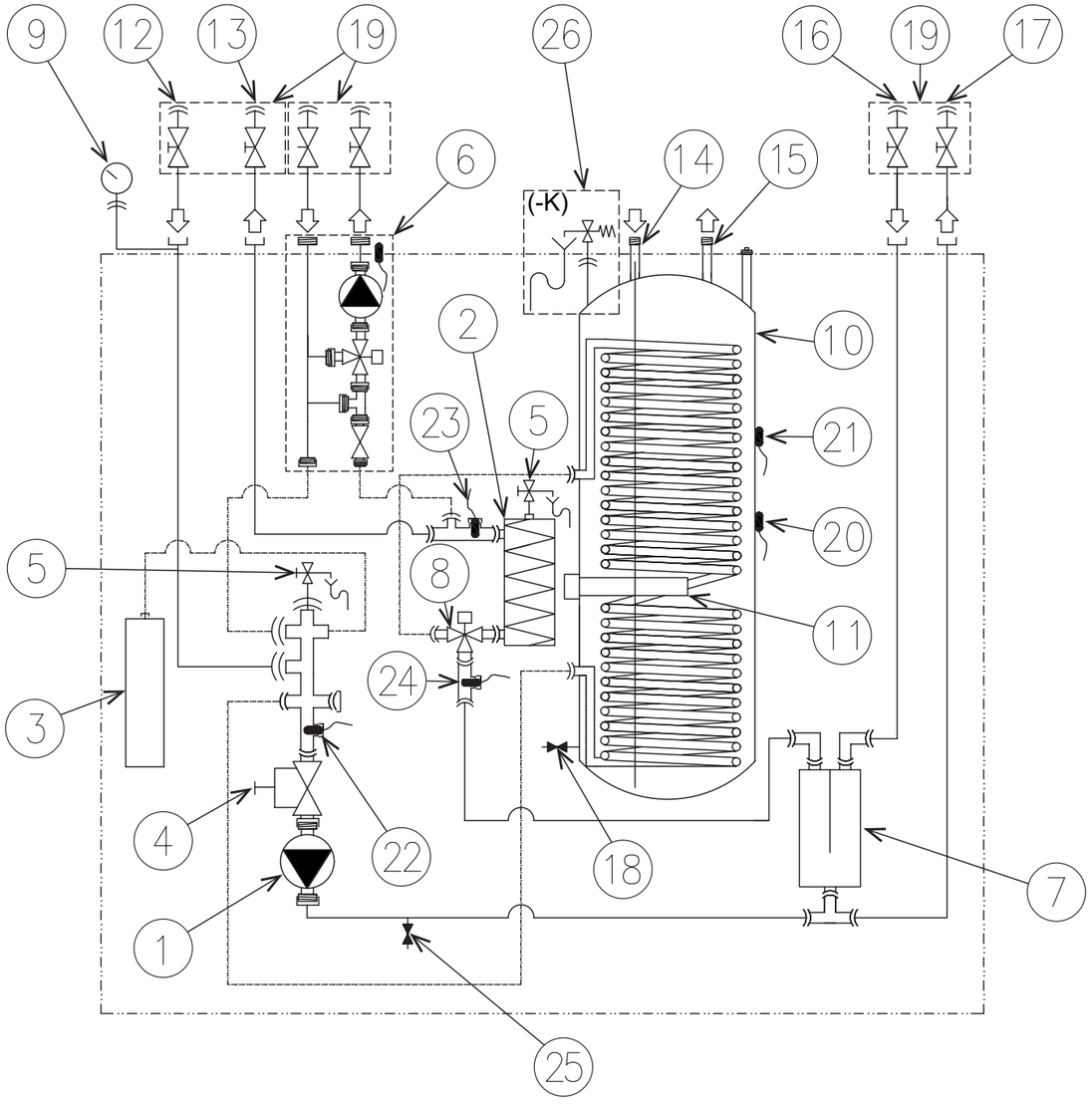

1. Water pump
2. Electric water heater
3. Expansion vessel (6 L)
4. Water strainer
5. Air purger (x2)
6. 2nd zone mixing kit (accessory)
7. Hydraulic separator and buffer tank
8. 3-way valve (for space heating and DHW)
9. Manometer
10. DHW tank (220 L)
11. DHW tank heater+thermostat
12. Water inlet pipe connection (G 1” female)
13. Water outlet pipe connection (G 1” female)
14. DHW inlet pipe connection (G 3/4” male)
15. DHW outlet pipe connection (G 3/4” male)
16. Water HP inlet connection (G 1” female)
17. Water HP outlet connection (G 1” female)
18. Drain port (for DHW) (G 3/8”)
19. Shutdown valves (factory supplied accessory)
20. DHW thermistor 1 (down)
21. DHW thermistor 2 (up)
22. Water inlet thermistor (THMwi)
23. Water outlet thermistor (THMwo)
24. Water heat pump thermistor (THMwohp)
25. Drain port (for unit) (G 3/8”)
26. Pressure and temperature valve (for UK models only)

NOTE

All pipes: ø28.6 mm

Refrigerant notes and water piping

8.1 General notes before performing piping work 82

8.1.1 Piping work 82

8.1.2 Suspension of water pipes 83

8.2 R290 refrigerant circuit 83

8.2.1 General notes R290 refrigerant 83

8.2.2 Precautions in the event of gas refrigerant leaks 84

8.3 Refrigerant charge amount 84

8.4 Hydraulic connections 85

8.4.1 Hydrosplit system- **airH2O 800M** + **airH2O 800H** 85

8.4.2 Hydrosplit system- **airH2O 800M** + **airH2O 800H Combi** 86

8.4.3 Control Box system- **airH2O 800M** + Control Box 86

8.5 Parts name list 87

8.6 Space heating and DHW for **airH2O 800 Hydrosplit** 88

8.6.1 Additional hydraulic necessary elements for space heating 88

8.6.2 Additional hydraulic necessary elements for DHW 88

8.6.3 Additional hydraulic optional elements for DHW 90

8.6.4 Additional hydraulic necessary elements for DHW (UK market) 90

8.6.5 Requirements and recommendations for the hydraulic circuit 91

8.6.6 Anti-freezing protection for water circuit 92

8.6.7 Insulation 95

8.6.8 Water piping 95

8.6.8.1 Water piping length 95

8.6.8.2 Water piping size 96

8.6.9 Water quality 97

8.1 General notes before performing piping work

8.1.1 Piping work

- Select the piping size with the correct thickness and correct material able to withstand sufficient pressure.

NOTE

A system with no oil contamination will give maximum performance and life-cycle compared to that of a poorly prepared system. Take particular care to ensure that all piping is clean.

- Cap the end of the pipe when pipe is to be inserted through a wall hole.
- Do not put pipes on the ground directly without a cap or vinyl tape at the end of the pipe.

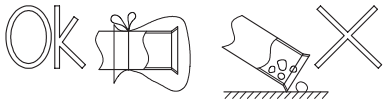

- If piping installation is not completed until next day or over a longer period of time, cover the ends of the piping to prevent particle contamination.
- It is advisable to insulate the water pipes, joints and connections in order to avoid heat loss and dew condensation on the surface of the pipes or accidental injuries due to excessive heat on piping surfaces.
- If using copper pipes, do not use insulation material that contains NH_3, as it can damage the material and become a source of future leakage.
- It is recommended to use flexible joints for the water piping inlet and outlet in order to avoid vibration transmission.
- Water circuit must be performed and inspected by a licensed technician and must comply with all relevant European and national regulations.
- Proper water pipe inspection should be performed after piping work to assure there is no water leakage in the space heating or DHW circuits.

8.1.2 Suspension of water pipes

- Suspend the water piping at certain points and prevent it from being in direct contact with the building: walls, ceilings, etc. If there is direct contact between pipes, abnormal sound may occur due to the vibration of the piping. Pay special attention in cases of short piping lengths.

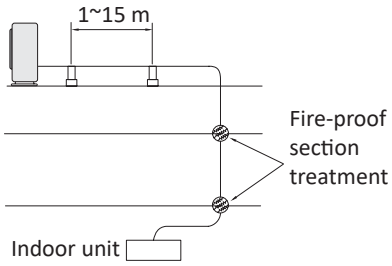

- Do not fix the water pipes directly with the metal fittings (piping may expand and contract). Some examples for suspension method are shown below.

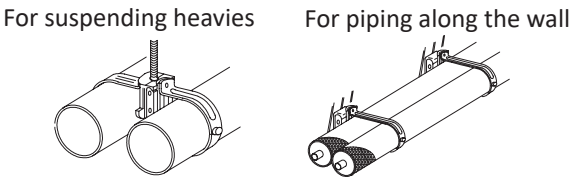

8.2 R290 refrigerant circuit

8.2.1 General notes R290 refrigerant

RASM-(2-6)(V)TW2E appliances are filled with R290, an odourless flammable refrigerant gas (A3 class pursuant to ISO 817). If the refrigerant is leaked, there is a possibility of ignition if it enters in contact with an external ignition source.

Make sure that unit installation complies with applicable legislation in each country and with the applicable standard EN 378.

Due to R290 refrigerant and Monobloc configuration, minimum free distances around RASM-(2-6)(V)TW2E models must be ensured after installation.

The unit must be installed outdoors and keep the minimum distances with indoor openings as specified in the product manual. In addition, take precautions that there will not be refrigerant stagnation in the installation place because of a refrigerant leak, as instructed in the manual too.

In case of not achieving the installation restrictions provided in the manual, contact with your dealer.

For more detailed information, check the ADDITIONAL SAFETY MANUAL FOR R290 REFRIGERANT AIR CONDITIONER AND HEAT PUMPS, which can be found bundled with the outdoor unit.

8.2.2 Precautions in the event of gas refrigerant leaks

The installers and those responsible for drafting the specifications are obliged to comply with local safety codes and regulations in the case of refrigerant leakage.

⚠ CAUTION

Check for refrigerant leakage in detail. If a refrigerant leakage occurred, it would cause a risk of fire or explosion.

8.3 Refrigerant charge amount

The R290 refrigerant is factory charge in the outdoor unit. The refrigerant amount data is detailed in the *"General data"* chapter and in the corresponding unit manual.

8.4 Hydraulic connections

8.4.1 Hydrosplit system - airH2O 800M + airH2O 800H

Standard model

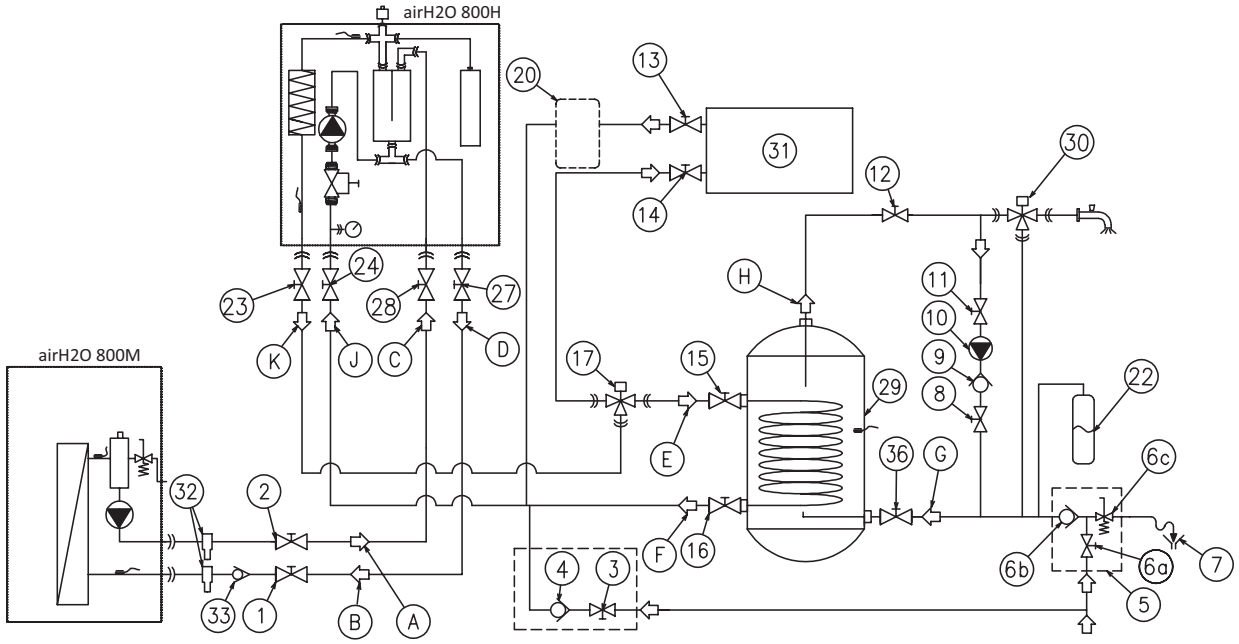

Model for boiler combination

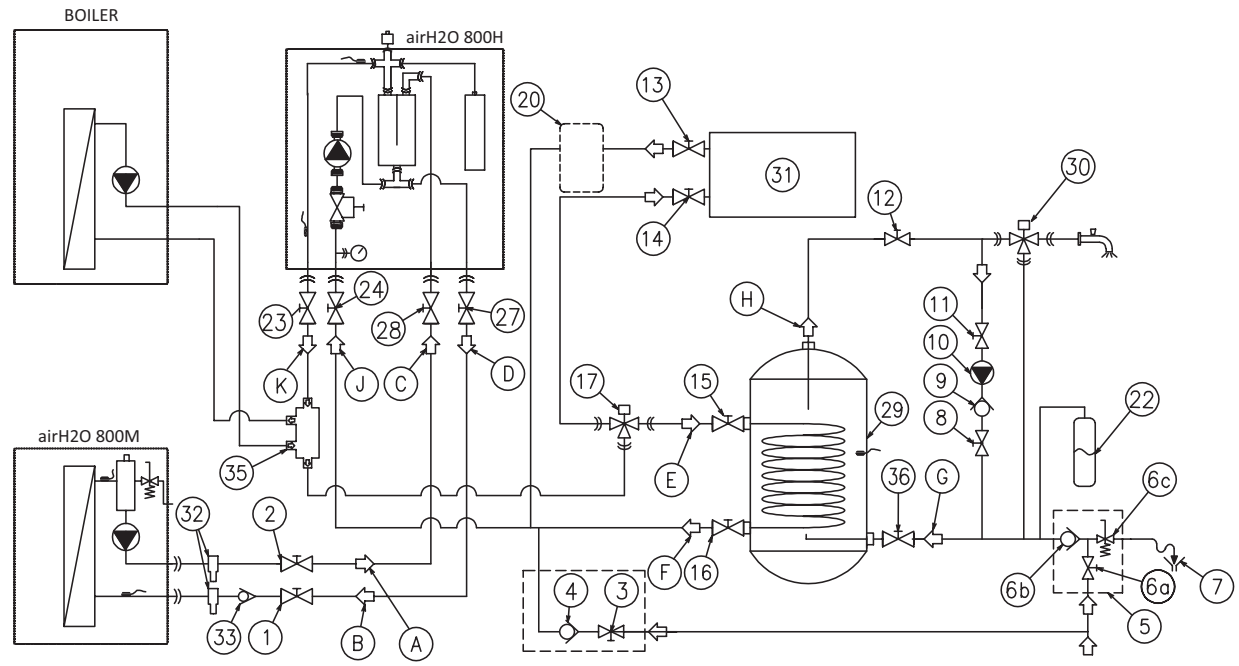

8.4.2 Hydrosplit system - airH2O 800M + airH2O 800H Combi

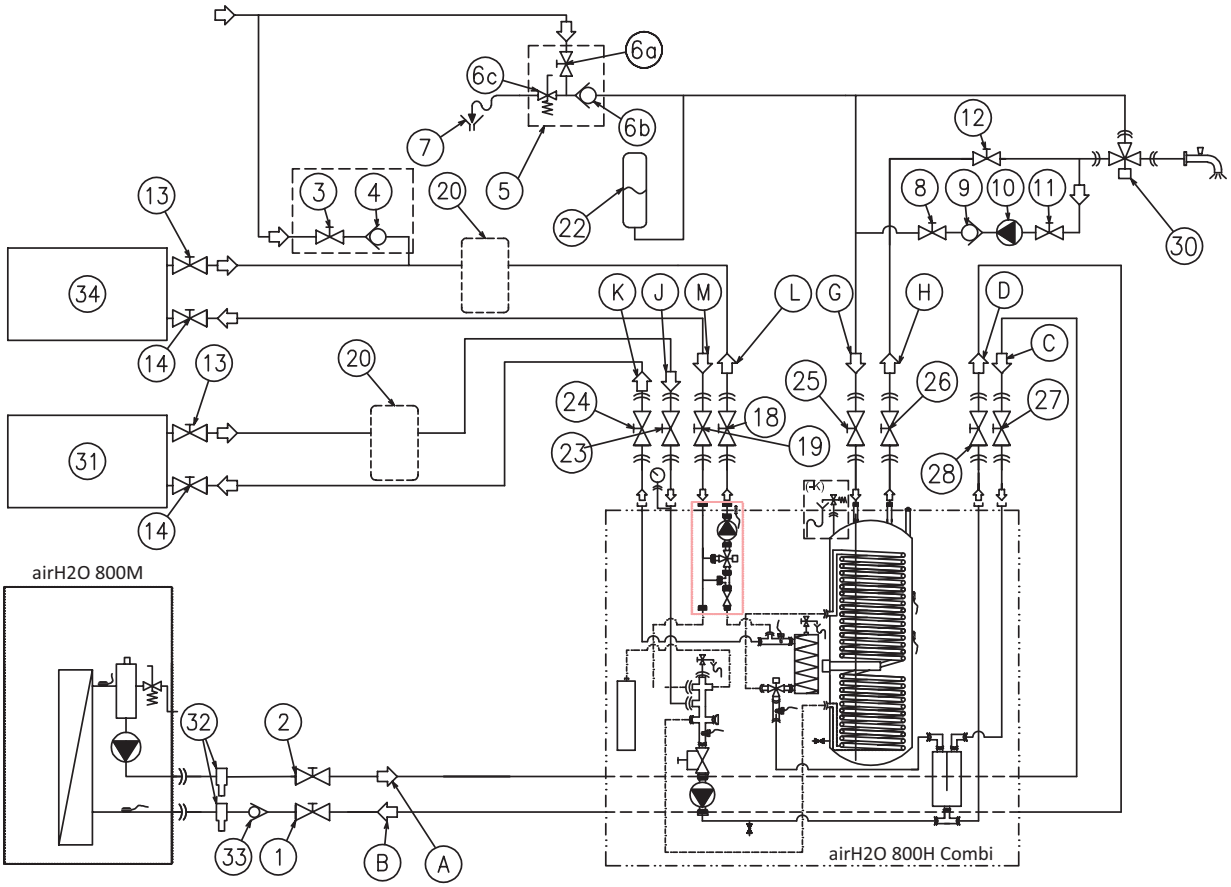

8.4.3 Control Box system - airH2O 800M + Control Box

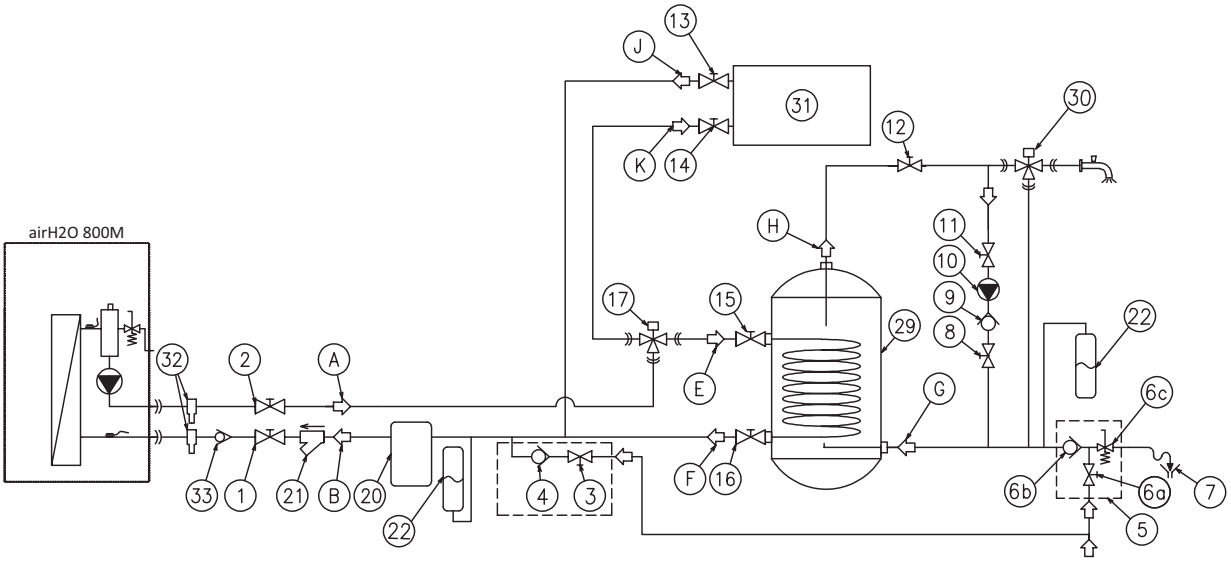

8.5 Parts name list

Item	Nature	Part Name
A	Piping connections	**airH2O 800M** water outlet
B	Piping connections	**airH2O 800M** water inlet
C	Piping connections	Hydrosplit water inlet from **airH2O 800M**
D	Piping connections	Hydrosplit water oulet to **airH2O 800M**
E	Piping connections	DHW coil inlet
F	Piping connections	DHW coil outlet
G	Piping connections	Water inlet (DHW)
H	Piping connections	Water outlet (DHW)
J	Piping connections	Water inlet (Space Heating/Cooling) from C1
K	Piping connections	Water outlet (Space Heating/Cooling) to C1
L	Piping connections	Water inlet (Space Heating/Cooling) from C2
M	Piping connections	Water outlet (Space Heating/Cooling) to C2
1	Field supplied	Shutdown valve
2	Field supplied	Shutdown valve
3	Field supplied	Shutdown valve
4	Accessories	Water check valve (ATW-WCV-01 accessory)
5	Field supplied	Pressure and check valve
6a	Field supplied	Shutdown valve
6b	Field supplied	Water check valve
6c	Field supplied	Pressure relief valve
7	Field supplied	Draining
8	Field supplied	Shutdown valve
9	Accessories	Water check valve (ATW-WCV-01 accessory)
10	Field supplied	Water pump
11	Field supplied	Shutdown valve
12	Field supplied	Shutdown valve
13	Field supplied	Shutdown valve
14	Field supplied	Shutdown valve
15	Field supplied	Shutdown valve
16	Field supplied	Shutdown valve
17	Accessories	3-way valve (ATW-3WV-01 accessory)
18	Field supplied	Shutdown valve
19	Field supplied	Shutdown valve
20	Field supplied	Buffer tank
21	Field supplied	Water strainer (mandatory)
22	Field supplied	Expansion vessel
23	Factory supplied	Shutdown valve
24	Factory supplied	Shutdown valve
25	Factory supplied	Shutdown valve
26	Factory supplied	Shutdown valve
27	Factory supplied	Shutdown valve
28	Factory supplied	Shutdown valve
29	Accessories	Domestic hot water tank (DHWT-(200/300)S-3.0H2E accessory)
30	Field supplied	Thermostatic mixing valve
31	-	Space Heating/Cooling Distribution C1
32	Field supplied	Antifreeze valve
33	Factory supplied	Check valve (mandatory)
34	-	Space Heating/Cooling Distribution C2
35	Factory supplied	Hydraulic separator for boiler combination
36	Field supplied	Shutdown valve

8.6 Space heating and DHW for airH2O 800 Hydrosplit

DANGER

Do not connect the power supply to the indoor unit prior to filling the space heating and DHW circuits with water and checking water pressure and the total absence of any water leakage.

8.6.1 Additional hydraulic necessary elements for space heating

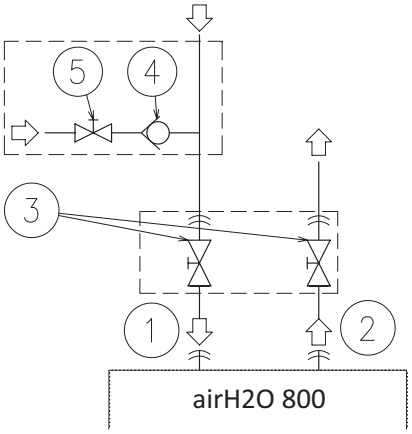

Type	№	Part name
Piping connections	1	Water inlet (space heating)
	2	Water outlet (space heating)
Factory supplied	3	Shutdown valve (field-supplied for Control Box system)
Accessories	4	Water check valve (ATW-WCV-01 accessory)
Field supplied	5	Shutdown valve

8.6.2 Additional hydraulic necessary elements for DHW

The next hydraulic elements are necessary to correctly perform the domestic hot water circuit:

◆ Common

The following elements are required for all **airH2O 800** units:

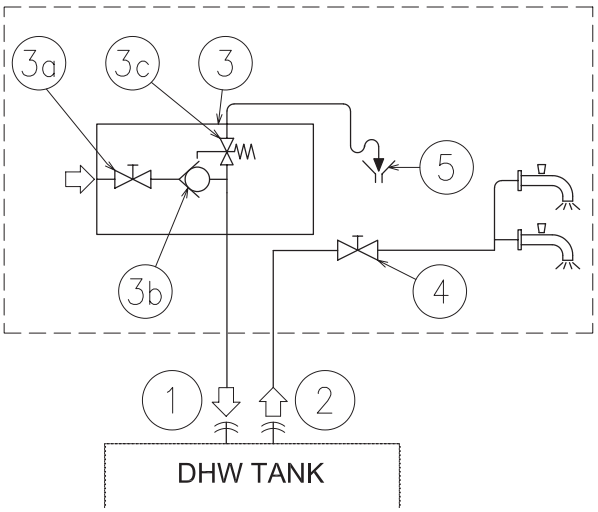

Type	№	Part name
Piping connections	1	Water inlet (DHW)
	2	Water outlet (DHW)
Field supplied	3	Pressure and temperature relief valve
		3a Shutdown valve
		3b Water check valve
		3c Pressure relief valve
	4	Shutdown valve
	5	Draining

NOTE

The discharge pipe should always be open to the atmosphere, free of frost and in continuous slope to the down side in case that water leakage exists.

◆ airH2O 800H (version with remote tank)

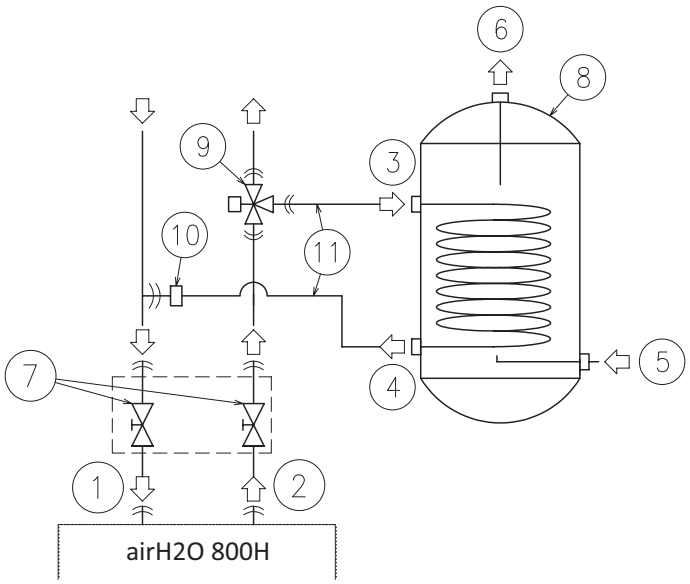

Type	Nº	Part name
Piping connections	1	Water inlet (space heating)
	2	Water outlet (space heating)
	3	Heating coil inlet
	4	Heating coil outlet
	5	Water inlet (DHW)
	6	Water outlet (DHW)
Factory supplied	7	Shutdown valve (field-supplied for Control Box system)
Accessories	8	Domestic hot water tank DHWT-(200/300)S-3.0H2E accessory
	9	3-way valve (ATW-3WV-01 accessory)
Field supplied	10	T-branch
	11	Heating coil pipes

◆ airH2O 800H Combi

These appliances are factory-supplied ready for DHW operation (fitted with DHW tank and 3-way valve). Only the “Common” elements are required.

8.6.3 Additional hydraulic optional elements for DHW

In case of a recirculation circuit for the DHW circuit:

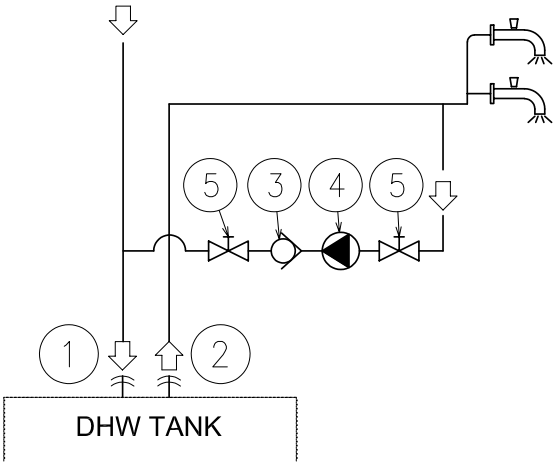

Type	Nº	Part name
Piping connections	1	Water inlet (DHW)
	2	Water outlet (DHW)
Accessories	3	Water check valve (ATW-WCV-01 accessory)
Field supplied	4	Water pump
	5	Shutdown valve

8.6.4 Additional hydraulic necessary elements for DHW (UK market)

Only for those models designed for the UK market:

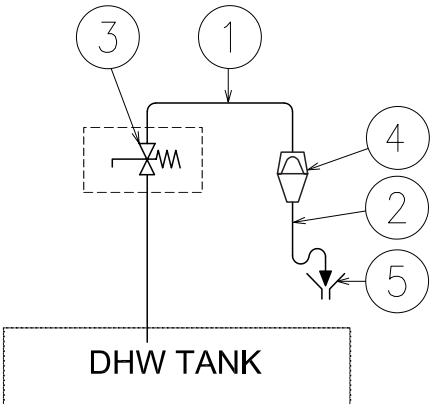

Type	Nº	Part name
Factory supplied	1	Pressure and temperature relief valve outlet pipe Ø15 mm
	3	Pressure and temperature relief valve
Field supplied	2	Tundish outlet pipe
	4	Tundish
	5	Drain

8.6.5 Requirements and recommendations for the hydraulic circuit

- The maximum piping length depends on the maximum pressure availability in the water outlet pipe. Please check the pump curves *"5.3.3 Pump performance curves"*.
- When the unit is stopped during shutdown periods and the ambient temperature is very low, the water inside the pipes and the circulating pump may freeze, thus damaging the pipes and the water pump. In these cases, the installer shall ensure that the water temperature inside the pipes does not fall below the freezing point. In order to prevent this, the unit has a self-protection mechanism which should be activated (refer to the Service manual, "Optional functions" chapter).
- Check that the water pump of the outdoor unit works within its operation range and that the water flow is over its minimum. If the water flow reaches 0.5 m^3/h for 2.0-3.5 HP units or 0.8 m^3/h for 4.0-6.0 HP units, an alarm is displayed on the unit.
- Check that the water pump of the indoor unit works within its operation range and that the water flow is over its minimum. If the water flow reaches 0.3 m^3/h, an alarm is displayed on the unit.
- An additional special water filter is highly recommended to be installed on the space heating (field installation), in order to remove possible particles remaining from brazing which cannot be removed by the unit water strainer.
- When selecting a tank for DHW operation, take into consideration the following points:
  - ✓ The storage capacity of the tank has to meet with the daily consumption in order to avoid stagnation of water.
  - ✓ Fresh water must circulate inside the DHW tank water circuit at least one time per day during the first days after the installation has been performed. Additionally, flush the system with fresh water when there is no consumption of DHW during long periods of time.
  - ✓ Try to avoid long runs of water piping between the tank and the DHW installation in order to decrease possible temperature losses.
  - ✓ If the domestic cold water entry pressure is higher than the equipment's design pressure (10 bar), a pressure reducer must be fitted with a nominal value of 7 bar.
- Ensure that the installation complies with applicable legislation in terms of piping connection and materials, hygienic measures, testing and the possible required use of some specific components like thermostatic mixing valves, differential pressure overflow valve, etc.
- Fill the water circuit with water from the main with the unit compressor stopped. Check that the pressure on the outdoor side, indicated on the LCD, is inside the working range. Do not use indoor pressure, as height difference between units can modify indoor pressure.
- Ensure that the drain pipes connected to the safety valve and to the air purger are properly driven or oriented to avoid water being in contact with unit components.
- Make sure that all field supplied components installed in the piping circuit can withstand the water pressure and the water temperature range in which the unit can operate.
- **airH2O 800** units are conceived for exclusive use in a closed water circuit.
- The internal air pressure of the expansion vessel tank will be adapted to the water volume of the final installation (factory supplied with 0.1 MPa of internal air pressure).
- Drain taps must be provided at all low points of the installation to permit complete drainage of the circuit during servicing.

8.6.6 Anti-freezing protection for water circuit

Frost can damage the system. To prevent components from freezing, software has been designed with special frost protection functions, that include the activation of pump and heater in case of low temperatures (see Service Manual Water pump control).

In case of a power supply failure, functions above cannot guarantee protection, allowing freezing and possible breakage of pipes and / or components. Due to that, an anti-freezing system (independent of power supply) is required:

- Adding glycol into the water circuit to lower the freezing point of water.
- Adding anti-freeze valves (field supplied)

⚠ CAUTION

Both methods cannot be used simultaneously since glycol can leak out from valves to environment.

◆ Glycol as anti-freezing protection

Adding glycol into the water circuit to lower the freezing point of water.

For **airH2O 800** systems, 2 types of glycols can be used: ethylene glycol and propylene glycol.

- Ethylene glycol is toxic. Consequently, its use is forbidden in systems that include a domestic hot water tank.
- Propylene glycol (including necessary inhibitors, classified as Category III according to EN1717) can be used in all systems.

Required concentration depends on:

- The lowest expected outdoor temperature.
- Protection against bursting or freezing.

On graphics below, required concentration depending on outside temperature is shown:

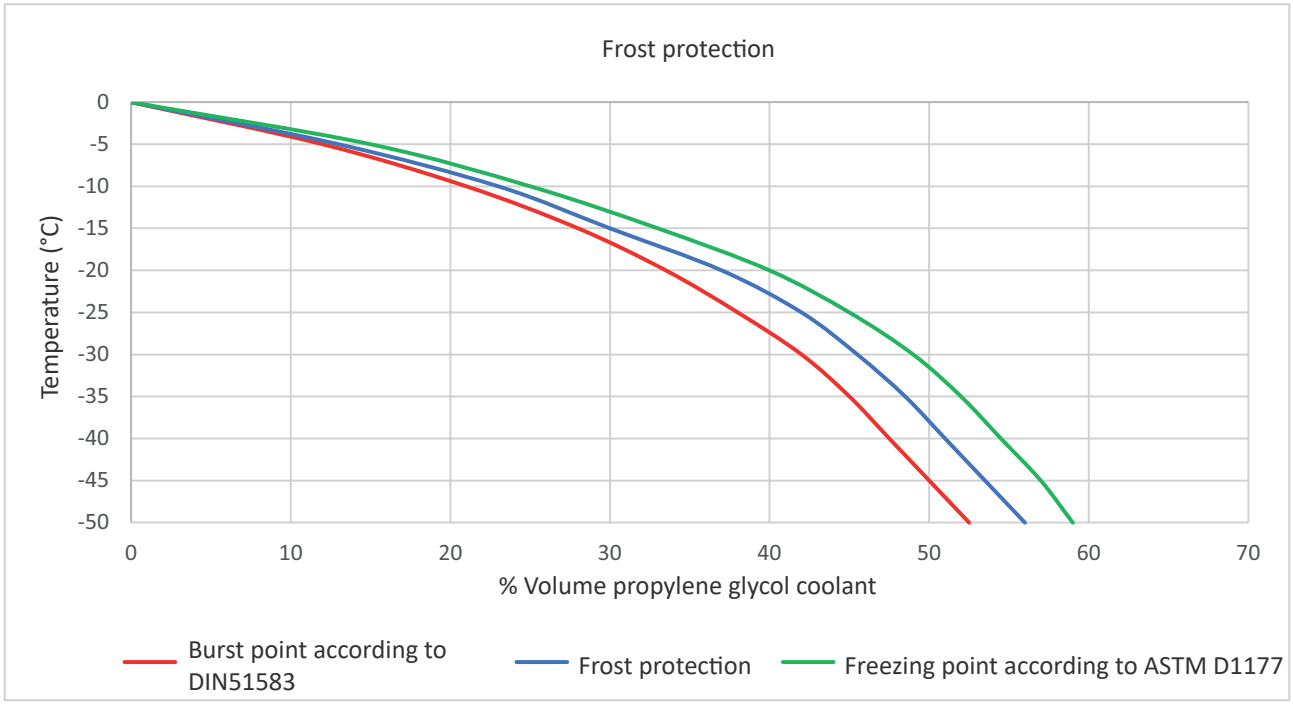

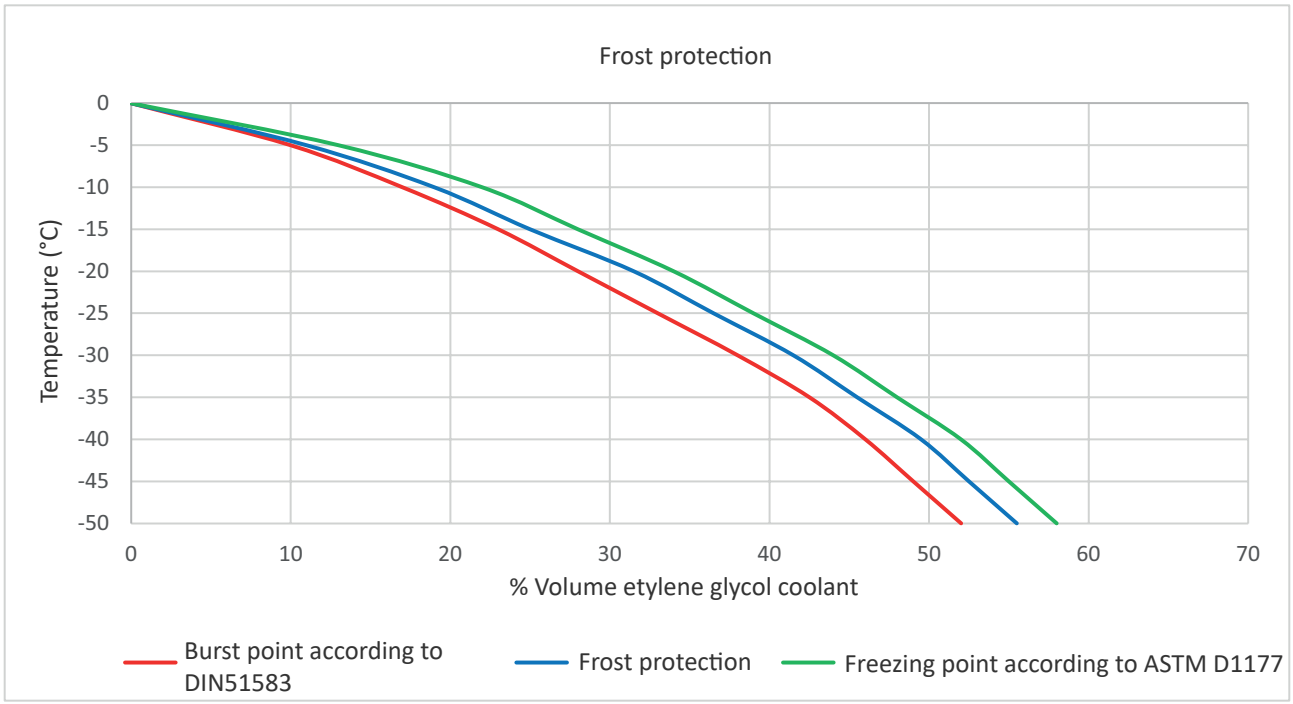

NOTE

- *Freezing point according to ASTM D 1177 is the temperature for the first ice crystal formation.*
- *The requirements of table must be always compared with glycol manufacturer specifications.*
- *Maximum concentration of glycol is 30%.*
- *If system is only prevented against bursting, pump must not be turned on (the liquid inside might be still frozen).*

CAUTION

- *Do not add glycol that has been exposed to air as glycol absorbs water from the environment. Final glycol concentration can be lower than expected, allowing system to freeze up.*
- *Corrosion, that can damage gravely the system, is possible when glycol is added. Uninhibited glycol with oxygen can become acidic and attack metal surfaces, forming galvanic corrosion cells. The responsible installer must be a qualified water specialist & should decide which anti-freeze solution is necessary for each site's conditions. Corrosion inhibitors must be selected to counteract acids formed by glycol oxidation. Inhibitors with limited lifetime or containing silicates are forbidden. Galvanized pipes must be avoided since they can precipitate inhibitors. When using inhibitors, always follow manufacturer's instructions and ensure that the product is appropriate for materials used in water circuit.*
- *Adding glycol to water circuit reduces the maximum allowed water volume of the system and also capacity.*

◆ Anti-freeze valves installation

In case of installing an anti-freeze valve (field-supplied), place it between the unit and the check valve:

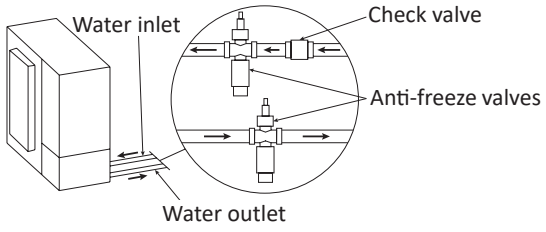

NOTE

- *Valve must be located outdoors, close to the heat pump connections and at least at the same height or below. Avoid water traps between heat pump and anti-freeze valve.*
- *To avoid false apertures of the anti-freeze valve, keep water temperature above 7°C in cooling operation.*
- *Always check and accomplish anti-freeze valve specification to ensure proper functionality.*

8.6.7 Insulation

Water circuit piping must be insulated to prevent condensation and to reduce heat loss.

For outdoor water piping, recommended insulation thickness depends on piping length. Recommended thickness values for an insulation of λ=0.039 W/mK are shown in table below.

Check to ensure that installation (thickness, insulating material, etc) already complies with the national and local regulations.

Piping length (mm)	Minimum insulation thickness (mm)
<20	19
20 - 30	32
30 - 40	40
40-50	50

8.6.8 Water piping

8.6.8.1 Water piping length

Consider the following guidelines when designing the water circuit:

◆ Hydrosplit system

Item	airH2O 800H	airH2O 800H Combi
Maximum water piping length between indoor unit and DHW tank	10 m	-
Maximum water piping length between indoor unit and 3-way valve	3 m	-
Minimum water piping length between outdoor unit and indoor unit	5 m	5 m

◆ Control Box system

Item	Control Box
Maximum water piping length between outdoor unit and 3-way valve	10 m
Maximum water piping length between 3-way valve and DHW tank	3 m

NOTE

DHW piping length: it is recommended to avoid long runs of piping between the domestic hot water tank and hot water outlet side in order to avoid heat losses.

8.6.8.2 Water piping size

◆ airH2O 800M - RASM-(2-6)(V)TW2E

(inches)

Heat pump pipes connection		
Inlet	Outlet	Shutdown valves (*)
G 1” (female)	G 1” (female)	G 1” (male) - G 1” (male)

◆ airH2O 800H - HWM-W2E(-B)

(inches)

Heat pump pipes connection			Space heating pipes connection		
Inlet	Outlet	Shutdown valves	Inlet	Outlet	Shutdown valves
G 1” (female)	G 1” (female)	G 1” (male) - G 1” (male)	G 1” (female)	G 1” (female)	G 1” (male) - G 1” (male)

◆ airH2O 800H Combi - HWD-W2E-220S(-K)

(inches)

Heat pump pipes connection			Space heating pipes connection			Domestic hot water tank pipes connection			
Inlet	Outlet	Shutdown valves	Inlet	Outlet	Shutdown valves	Inlet	Outlet	Shutdown valves (*)	Pressure and Temperature relief valve (**)
G 1” (female)	G 1” (female)	G 1” (male) - G 1” (male)	G 1” (female)	G 1” (female)	G 1” (male) - G 1” (male)	G 3/4” (female)	G 3/4” (female)	G 3/4” (male) - G 3/4”	Ø15 mm

(*): Field supplied.

(**): Only for models for UK market.

8.6.9 Water quality

◆ General recommendations for primary (space heating/cooling) and secondary (DHW) circuit

⚠ CAUTION

- *Water quality must be according to EU council directive 98/83 EC.*
- *Water should be subjected to filtration or to a softening treatment with chemicals before application as treated water.*
- *It is also necessary to analyse the quality of water by checking pH, electrical conductivity, ammonia ion content, sulphur content, and others. If the results of the analysis are not good, the use of industrial water would be recommended.*
- *No antifreeze agent shall be added to the water circuit in a split systems.*
- *To avoid deposits of scale on the heat exchangers surface it is mandatory to ensure a high water quality with low levels of $CaCO_3$.*

Before water filling, sludge removal (for existing water networks), cleansing and rinsing (for an existing or new installations water networks) it is important to cleanse all hydraulic pipes to remove sludge and scale by using a specific designed product for cleaning central heating systems.

Also, it is recommended to use a product inhibitor for protecting central heating systems against limescale and corrosion, always following manufacturer's instructions and ensuring that the product is suitable for the material used in the water network and the **airH2O 800** unit.

When using chemical treatments and inhibitors always follow manufacturer's instructions and ensure that the product is appropriate for the total water system. Using filling water that does not meet the stated quality requirements can cause a considerably reduction in service life. The responsibility will be out of Hitachi warranties.

The following are the water quality minimum requirements:

Parameter	Parametric Value	Unit
pH	6.5 to 8.5	-
Conductivity	10~500	µs/cm
Alkalinity	60~300	mg/l
Total Hardness	6~15	ºf H
	0.6~1.5	mmol/l
	60~150	mg $CaCO_3$ /l
Chlorine	<50	mg Cl^-/l
Sulphate	<50	(mg SO_4^{2-}/l)
Nitrate	< 100	mg/l (NO_3)
Iron	< 0.2	mg/l (Fe)
TDS (Total dissolved solids)	8~400	ppm
Appearance of the water	Clear and without deposits	-

◆ Additional DHW Circuit recommendation

In places where possible hard water areas, to prevent and minims scale situations, it is recommended to reduce stored water temperature to a maximum of 55°C, as huge scale quantity could damage the water tank and the electrical heater.

Flush the domestic water circuit with at least 10 times its volume of water. The life of the water tank will be shorter if groundwater (spring water, well water, etc.) is used without treatment which can lead to the corrosion of the tank. The water must not be aggressive or encrusting at any time. The result of calculating the Langelier Index should be between +/- 0.5.

In installation locations where the result of Langelier Index calculation are out of the expected value with a tendency to corrosive water, it is recommended to install the active anode accessory (ATW-CP-05 only available for **airH2O 800H Combi** version).

In the regions where the water is very hard (or out of requirements values) or where the result of Langelier Index calculation are out of expected value with a tendency to hard water, it is recommended fitting a softener system. Please ensure that softener system will be capable of providing effective protection against corrosion. It is recommended to install the active anode accessory (ATW-CP-05 only available for **airH2O 800H Combi** version).

As DHW tank water is being used for storing drinking water, this water has to be in accordance with national regulations and Hitachi's quality minimum requirements. The use of softeners, active anodes or others protective systems will not bring a derogation from Hitachi's provided warranty.

Electrical and control settings

9.1 General check 100
9.2 Electrical connection 102
9.2.1 System wiring diagram 103
9.2.2 Transmission wiring between outdoor and indoor units 104
9.2.3 Outdoor units power wiring connection 106
9.2.4 Indoor units power wiring connection 107
9.2.5 Unit controller (PC-ARFH3E) connection 108
9.2.6 Optional accessories connection 108
9.3 Wiring size and protection devices minimum requirements 109
9.3.1 Outdoor units 109
9.3.2 Indoor units- Hydrosplit system 110
9.3.3 Indoor units- Control Box system 111
9.4 Setting of DIP switches and rotary switches 111
9.4.1 Location of DIP switches and rotary switches 111
9.4.2 Function of DIP switches and rotary switches 112
9.4.2.1 Outdoor unit PCB1- Refrigerant cycle 113
9.4.2.2 Outdoor unit PCB2- Inverter (DRV075, only single-phase units) 116
9.4.2.3 Indoor unit PCB- Water cycle 116
9.5 Optional indoor unit wiring (accessories) 122
9.5.1 Summary of the terminal board connections 122

9.1 General check

Make sure that the following conditions related to power supply installation are satisfied:

- The power capacity of the electrical installation is large enough to support the power demand of the **airH2O 800** system (outdoor unit + indoor unit + DHW tank (if apply)).
- The power supply voltage is within ±10% of the rated voltage.
- The impedance of the power supply line is low enough to avoid any voltage drop of more than 15% of the rated voltage.

Following the Council Directive 2014/30/EU, relating to electromagnetic compatibility, the tables below indicate the maximum permitted system impedance Z_{max} at the interface point of the user's supply, in accordance with EN 61000-3-11, as well as the status of harmonics for each model, regarding compliance with EN 61000-3-2 (professional use equipment) and EN 61000-3-12.

Check to ensure that existing installation (mains power switches, circuit breakers, wires, connectors and wire terminals) already complies with the national and local regulations.

◆ Outdoor units

airH2O 800M - *RASM-(2-6)(V)TW2E*

Model	Power supply	Z_{max} (Ω)	Status regarding compliance with EN 61000-3-2 and EN 61000-3-12
RASM-2VTW2E	~ 230 V 50 Hz	-	EN 61000-3-2
RASM-3VTW2E		0.38	EN 61000-3-12
RASM-3.5VTW2E		0.33	
RASM-(4-6)VTW2E		0.23	
RASM-(4-6)TW2E	3N~ 400 V 50 Hz	-	

◆ Indoor units - Hydrosplit system

NOTE

The use of the DHW tank heater is disabled as factory setting. If it is desired to enable the DHW tank heater operation during normal indoor unit operation, adjust the DSW4 pin 3 of the indoor unit PCB to the ON position and use the adequate protections.

airH2O 800H - HWM-W2E(-B)

Model	Power supply	Operation mode	Z_{max} (Ω)	Status regarding compliance with EN 61000-3-2 and EN 61000-3-12
HWM-W2E(-B)	~ 230 V 50 Hz	Without electric heaters	-	EN 61000-3-2
		With electric heater	0.28	EN 61000-3-12
		With DHW tank heater	-	EN 61000-3-2
		With electric and DHW tank heaters	0.19	EN 61000-3-12
	3N~ 400 V 50 Hz	Without electric heaters	-	EN 61000-3-2
		With electric heater	-	EN 61000-3-2
		With DHW tank heater	-	EN 61000-3-2
		With electric and DHW tank heaters	-	EN 61000-3-12

NOTE

The data corresponding to DHW tank heater is calculated in combination with the domestic hot water tank accessory "DHWT-(200/300)S-3.0H2E".

airH2O 800H Combi - HWD-W2E-220S(-K)

Model	Power supply	Operation mode	Z_{max} (Ω)	Status regarding compliance with EN 61000-3-12
HWD-W2E-220S(-K)	~ 230 V 50 Hz	Without electric heaters	-	EN 61000-3-2
		With electric heater	0.28	EN 61000-3-12
		With DHW tank heater	-	EN 61000-3-2
		With electric and DHW tank heaters	0.19	EN 61000-3-12
	3N~ 400 V 50 Hz	Without electric heaters	-	EN 61000-3-2
		With electric heater	-	EN 61000-3-12
		With DHW tank heater	-	EN 61000-3-2
		With electric and DHW tank heaters	-	EN 61000-3-12

9.2 Electrical connection

◆ Safety instructions

NOTE

- *Check the requirements and recommendations in chapter "9.3 Wiring size and protection devices minimum requirements".*
- *The torque for the tightening of the screws of each Terminal board is explained in the table below:*

Terminal board	Tightening torque (N·m)
TB1	2.0~2.5
TB2	1.0~1.3

- *Key words:*
  - ✓ PE: Protective earth
  - ✓ ELB: Earth leakage breaker
  - ✓ CB: Circuit breaker

DANGER

- ***Do not connect the power supply to the unit before all connections have been previously done.***
- ***Do not connect the power supply to the unit prior to filling the space heating circuit (and DHW circuit if it were the case) with water and checking water pressure and the total absence of any water leakage.***
- ***Do not connect or adjust any wiring or connections unless the main power switch is OFF.***
- ***When using more than one power source, check and ensure that all of them are turned OFF before operating the unit.***
- ***Avoid wiring installation in contact with the water pipes, edges of plates and electrical components inside the unit to prevent damage, which may cause electric shock or short circuit.***

CAUTION

- *Use a dedicated power circuit for each unit. Do not use a power circuit shared with any other appliance.*
- *Make sure that all wiring and protection devices are properly selected, connected, identified and fixed to the corresponding terminals of the unit, specially the protection (earth) and power wiring, taking into account the applicable national and local regulations. Establish proper earthing; Incomplete earthing may cause electrical shock.*
- *Protect the unit against the entry of small animals (like rodents) which could damage any internal wire or any other electrical part, leading to electric shock or short-circuit.*

- *Keep a distance between each wiring terminal and attach insulation tape or sleeve as shown in the figure.*

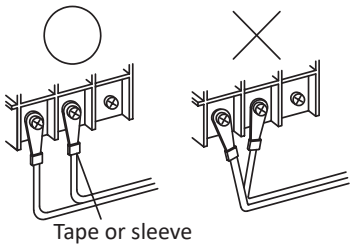

9.2.1 System wiring diagram

Connect the units according to the following electric diagram:

TB	:	Terminal board	——	:	Field wiring
CB	:	Circuit breaker	⚙	:	Field-supplied
ELB	:	Earth leakage breaker	1,2	:	Outdoor-Indoor communication

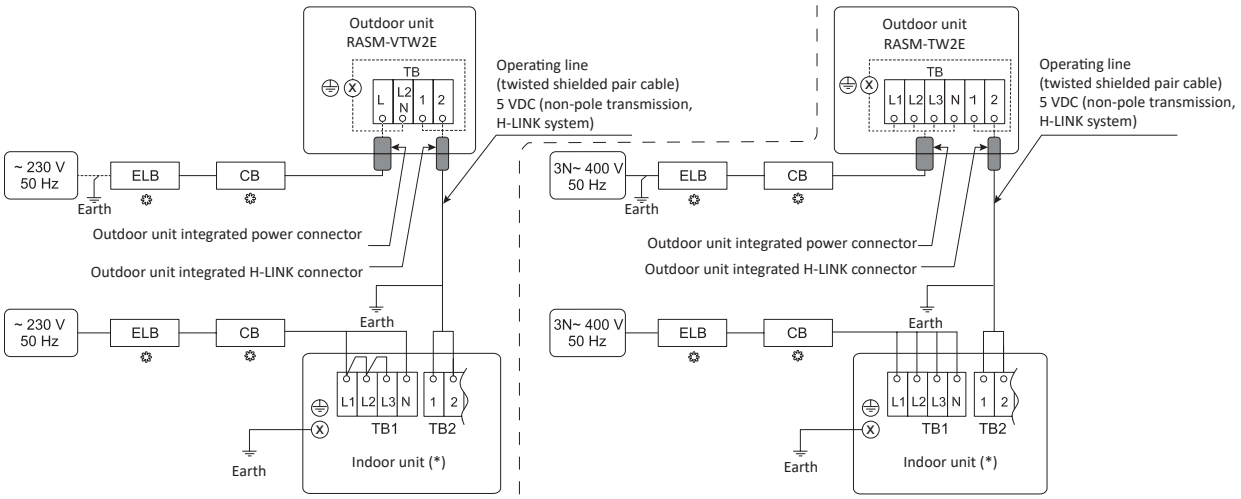

(*) Different connection particularities may apply depending on the specific indoor unit

Refer to the subsequent sections to know the specific connection details and procedures for each unit.

9.2.2 Transmission wiring between outdoor and indoor units

◆ H-LINK connector assembly

1 Prepare a 2-wires cable:

✓ Use twist pair wires (0.75 mm²) for operation wiring between outdoor unit and indoor unit. The wiring must consist of 2-core wires (do not use wire with more than 3 cores).

✓ Use shielded wires for intermediate wiring to protect the units from noise interference, with a length of less than 300 m and a size in compliance with local codes.

2 Stripe 25 mm of the sheath and 8 mm of each wire:

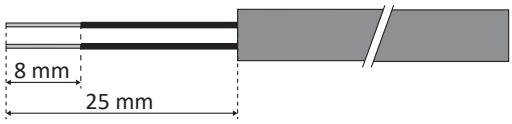

3 Open the outdoor unit factory-supplied H-LINK connector and pass the striped cable through it:

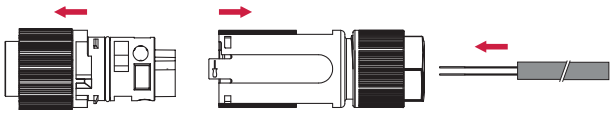

4 Screw the 2 wires to the ports L and N (no polarity is to be considered), and use another wire to connect the cable shield to the PE port. Tighten all to 0.4 N·m:

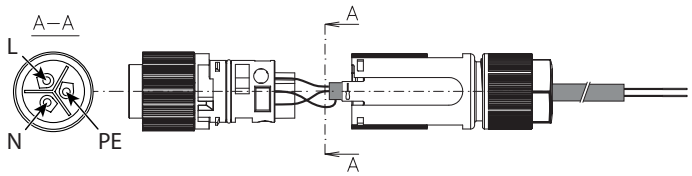

5 Close the H-LINK connector:

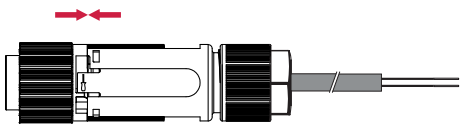

◆ Connection with indoor unit

The connection to the indoor unit is performed bolting the free endings of each wire to the Terminal Board 2 (TB2)as indicated in the picture (no polarity is to be considered) and the shield to the ground:

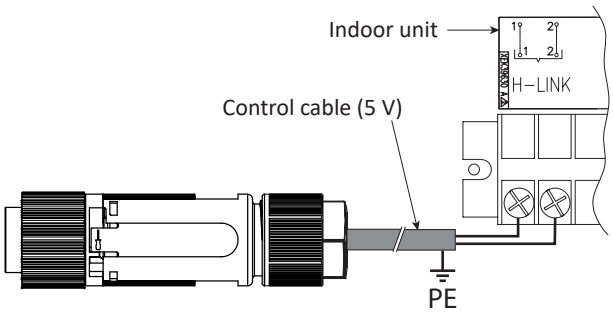

◆ Connection with outdoor unit

Then, the connection to the outdoor unit is simply performed inserting the previously assembled connector to its counterpart found integrated in the lower part of the rear cover of the outdoor unit:

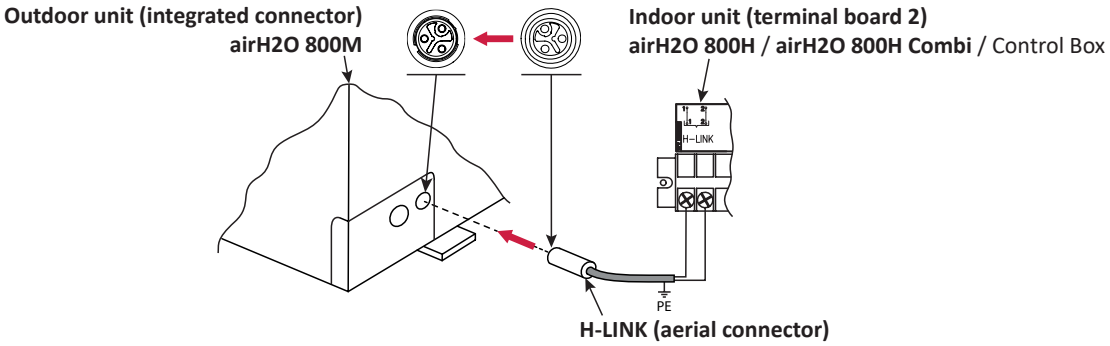

⚠ CAUTION

Ensure that the transmission wiring is not wrongly connected to any live part that could damage the PCB.

9.2.3 Outdoor units power wiring connection

◆ Power connectors assembly

1 Prepare a 3-wires (single-phase units) or 5-wires (three-phase units) cable (see section *"9.3 Wiring size and protection devices minimum requirements"*).

2 Stripe 26.5 mm of the sheath and 8 mm of each wire:

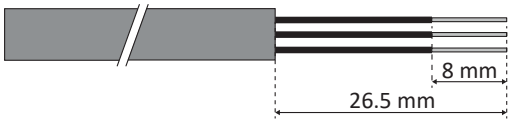

3-wires cable (single-phase units)

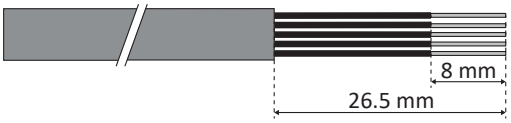

5-wires cable (three-phase units)

3 Open the factory-supplied power connector and pass the cable through it:

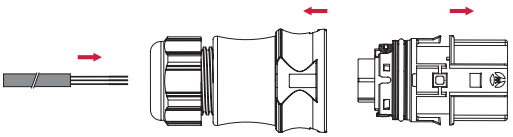

3-poles power connector (single-phase units)

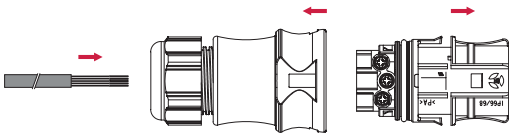

5-poles power connector (three-phase units)

4 Screw the wires to the 3/5 ports, tightening to 0.8 N·m - 1 N·m:

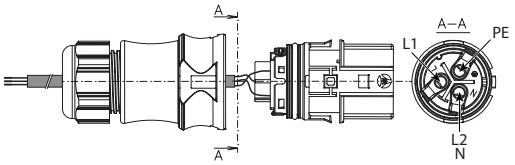

3-poles power connector (single-phase units)

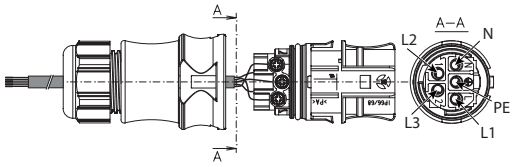

5-poles power connector (three-phase units)

5 Close the power connector:

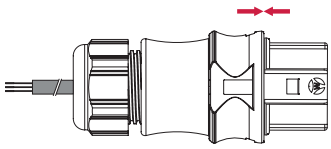

3-poles power connector (single-phase units)

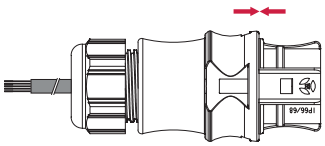

5-poles power connector (three-phase units)

◆ Connection with the grid

Connect the other endings of the wires to the power supply as indicated in the drawing, being careful not to confuse them. Be sure to place the corresponding ELB and CB in between:

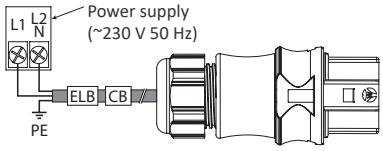

Single-phase units grid connection

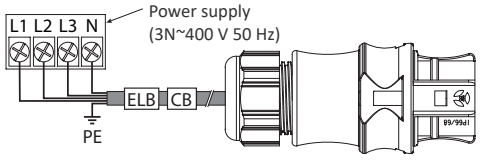

Three-phase units grid connection

◆ Connection with outdoor unit

Connect the power connector coming from the power supply to its counterpart in the outdoor unit (below, in the rear).

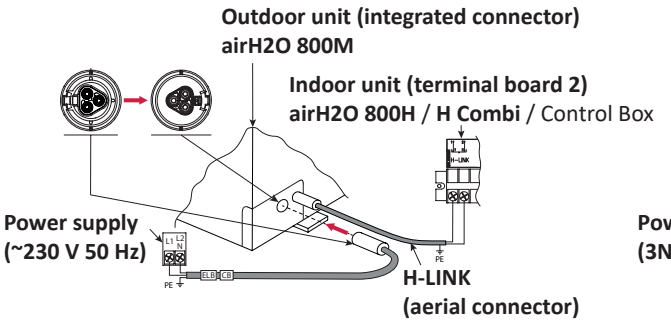

Single-phase units grid connection

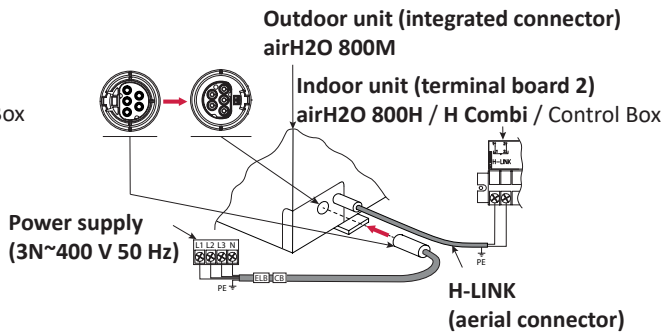

Three-phase units grid connection

9.2.4 Indoor units power wiring connection

Connect the power supply wires to the Terminal Board 1 (TB1), and the earth conductor to the earth screw in the electrical box plate.

Depending on the indoor unit, the TB1 and earth screw locations are as follows:

airH2O 800H	airH2O 800H Combi	Control Box
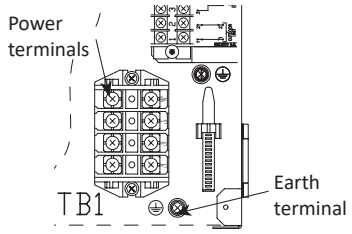	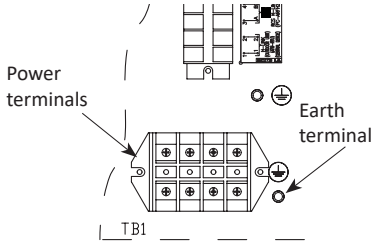	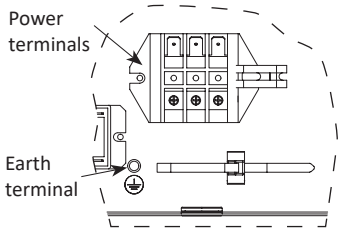

Using the appropriate cable, connect the power circuit to the appropriate terminals as shown on the wiring labels and the illustrations below:

◆ airH2O 800H + airH2O 800H Combi

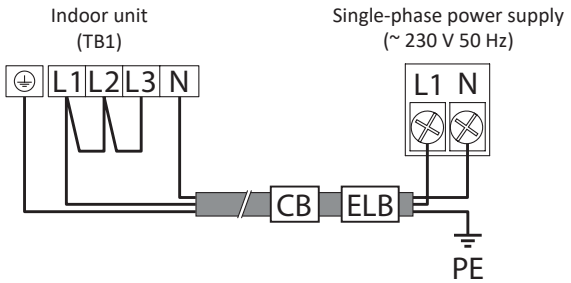

Single-phase grid connection

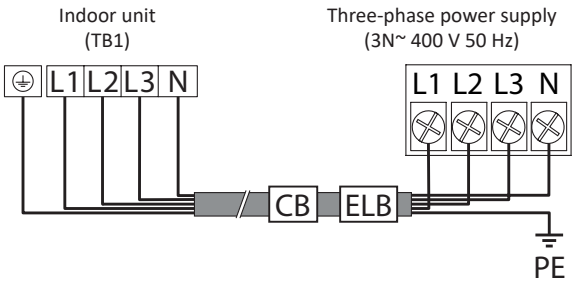

Three-phase grid connection

NOTE

In the case of a single-phase power supply, use the power connection bridge attached in the accessory bag, following these instructions:

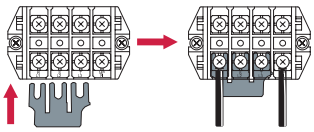

◆ Control Box

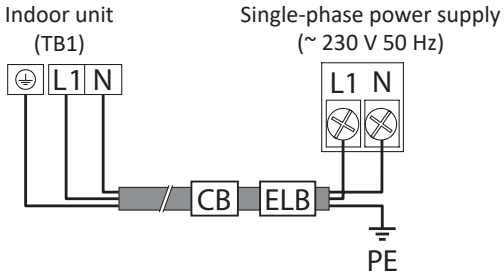

Single-phase grid connection

9.2.5 Unit controller (PC-ARFH3E) connection

Connection for the Unit controller PC-ARFH3E should be done on the Terminal Board 2 (TB2) as shown in the next figure:

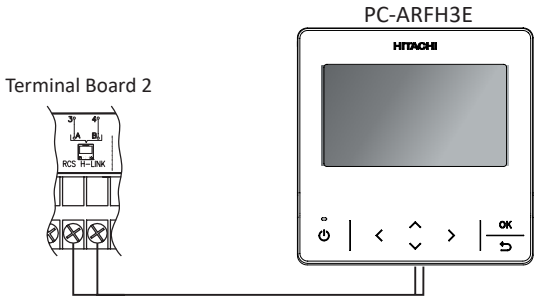

CAUTION

- *The installation and connection is already factory-performed in the* **airH2O 800H** *and* **airH2O 800H Combi***.*
- *For the Control Box, it is mandatory to install the Unit controller in the service cover. A cable is supplied for the connection.*

9.2.6 Optional accessories connection

Carry out the necessary electrical connections of the optional accessories using the Terminal Board 2 (TB2). Consult its label for a better understanding (see section *"9.5.1 Summary of the terminal board connections"*).

9.3 Wiring size and protection devices minimum requirements

CAUTION

- *Check to ensure that the field supplied electrical components (mains power switches, circuit breakers, wires, connectors and wire terminals) have been properly selected according to the electrical data indicated on this chapter and they comply with national and local codes. If it is necessary, contact with your local authority in regards to standards, rules, regulations, etc.*
- *Use a dedicated power circuit for each unit. Do not use a power circuit shared with any other appliance.*
- *Ensure specifically that there is an Earth Leakage Breaker (ELB) and a Circuit Breaker (CB) installed for the units (outdoor and indoor units) in the power supply lines.*
- *If the installation is already equipped with an Earth Leakage Breaker (ELB), ensure that its rated current is large enough to hold the current of the units (outdoor and indoor units).*

NOTE

- *Electric fuses can be used instead of magnetic Circuit Breakers (CB). In that case, select fuses with similar rated values as the CB.*
- *The Earth Leakage Breaker (ELB) mentioned on this manual is also commonly known as Residual Current Device (RCD) or Residual Current Circuit Breaker (RCCB).*
- *The Circuit Breakers (CB) are also known as Thermal-Magnetic Circuit Breakers or just Magnetic Circuit Breakers (MCB).*
- *Use wires which are not lighter than the polychloroprene sheathed flexible cord (code designation 60245 IEC 57).*

9.3.1 Outdoor units

◆ airH2O 800M - RASM-(2-6)(V)TW2E

Model	Power supply	Max current (A)	Power supply cables	Transmitting cables	CB (A)	ELB (no. of poles/A/mA)
RASM-2VTW2E	~ 230 V 50 Hz	14.2	2 x 2.5 mm² + GND	2 x 0.75 mm²	16	2/40/30
RASM-3VTW2E		17.7	2 x 4 mm² + GND		20	
RASM-3.5VTW2E		20.7	2 x 6 mm² + GND		25	
RASM-(4-6)VTW2E		29.2	2 x 6 mm² + GND		32	
RASM-(4-6)TW2E	3N~ 400 V 50 Hz	16.7	4 x 4 mm² + GND		20	4/40/30

9.3.2 Indoor units - Hydrosplit system

◆ airH2O 800H - HWM-W2E(-B)

Model	Power supply	Operation mode	Max current (A)	Power supply cables EN 60335-1	Transmitting cables	Actuator cables	CB (A)	ELB (nº of poles/A/mA)
HWM-W2E(-B)	~ 230 V 50 Hz	Without electric heaters	0.7	2 x 0.75 mm² + GND	2 x 0.75 mm²	2 x 0.75 mm² + GND	5	2/40/30
		With electric heater	26.7	2 x 6.0 mm² + GND			32	
		With DHW tank heater	13.7	2 x 2.5 mm² + GND			16	
		With electric and DHW tank heaters	39.8	2 x 10.0 mm² + GND			50	2/63/30
	3N~ 400 V 50 Hz	Without electric heaters	0.7	4 x 0.75 mm² + GND			5	4/40/30
		With electric heater	9.3	4 x 2.5 mm² + GND			16	
		With DHW tank heater	13.7	4 x 2.5 mm² + GND			16	
		With electric and DHW tank heaters	22.4	4 x 6.0 mm² + GND			25	

NOTE

The data corresponding to DHW tank heater is calculated in combination with the domestic hot water tank accessory "DHWT-(200/300)S-3.0H2E".

◆ airH2O 800H Combi - HWD-W2E-220S(-K)

Model	Power supply	Operation mode	Max. current (A)	Power supply cables	Transmitting cables	Actuator cables	CB (A)	ELB (no. of poles/A/mA)
HWD-W2E-220S(-K)	~ 230 V 50 Hz	Without electric heaters	0.7	2 x 0.75 mm² + GND	2 x 0.75 mm²	2 x 0.75 mm² + GND	5	2/40/30
		With electric heater	26.7	2 x 6.0 mm² + GND			32	
		With DHW tank heater	12.6	2 x 2.5 mm² + GND			16	
		With electric and DHW tank heaters	38.7	2 x 10.0 mm² + GND			50	2/63/30
	3N~ 400 V 50 Hz	Without electric heaters	0.7	4 x 0.75 mm² + GND			5	4/40/30
		With electric heater	17.3	4 x 4.0 mm² + GND			20	
		With DHW tank heater	12.6	4 x 2.5 mm² + GND			16	
		With electric and DHW tank heaters	17.3	4 x 4.0 mm² + GND			20	

9.3.3 Indoor units - Control Box system

◆ Control Box - ATW-CBX-01

Power supply	Operation mode	Max Current (A)	Power supply cables EN 60335-1	Transmitting cables EN 60335-1	CB (A)	ELB (nº of poles/A/mA)
~230 V 50 Hz	-	5	2 x 0.75 mm²	2 x 0.75 mm²	5	2/40/30
	With DHW Tank	19	2 x 4 mm²		20	

9.4 Setting of DIP switches and rotary switches

9.4.1 Location of DIP switches and rotary switches

The PCBs in the outdoor and indoor units are operating with DIP switches and rotary switches. The locations are as follows:

◆ Outdoor units - airH2O 800M

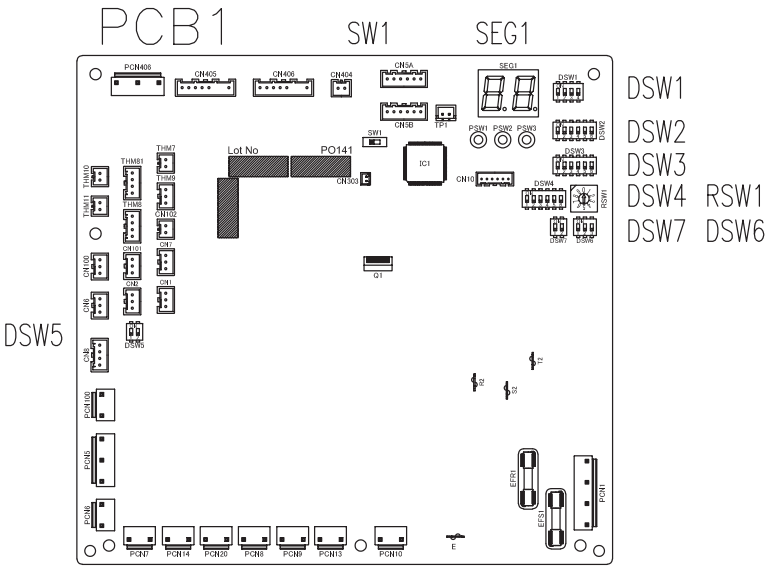

PCB1 - Refrigerant cycle

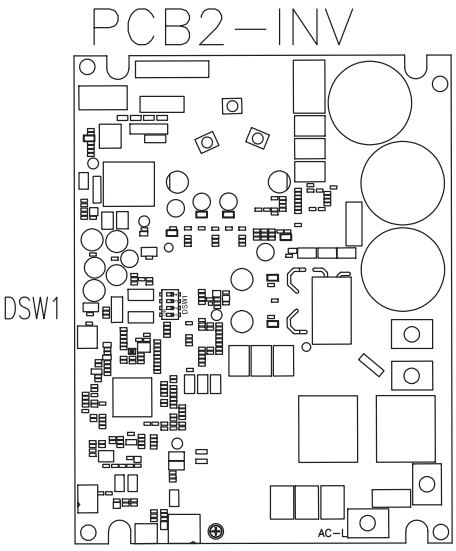

PCB2 - Inverter (*)

NOTE

- *PCBs are enclosed inside a sealed electrical box, which should only be opened in the following cases:*
  - » *PCBs replacement (as setting of the PCB1 DSW3 becomes mandatory).*
  - » *Connection to a Cascade Controller (as address and end resistance settings become mandatory).*

- *Other procedures such as performing the test run or modifying the optional functions shall now be done by means of the indoor unit controller.*
- *(*) Image corresponding to the single-phase units PCB2 (DRV-075), whose DSW1 may be configured (which is not the case of the 3-phase units).*

◆ Indoor units - airH2O 800H, airH2O 800H Combi and Control Box

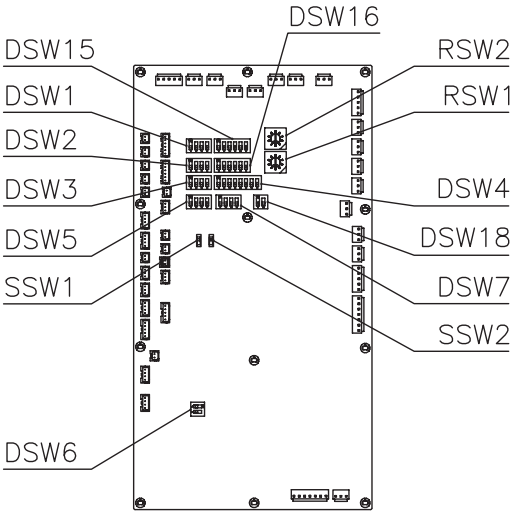

PCB - Water cycle

9.4.2 Function of DIP switches and rotary switches

NOTE

- *The mark "■" indicates the position of DIP switches.*
- *No mark "■" indicates pin position is not affecting.*
- *The figures show the settings before shipment or after selection.*
- *"Not used" means that the pin must not be changed. A malfunction might occur if changed.*

DANGER

Before setting DIP switches, first turn the power source off and then set the position of the DIP switches. In case of setting the switches without turning the power source off, the contents of the setting are invalid.

9.4.2.1 Outdoor unit PCB1 - Refrigerant cycle

◆ DSW1

Test run mode

Function	DSW1 setting
Factory setting	

NOTE

- *This operation is reset once the compressor is in Thermo-ON mode.*
- *During the test run operation the units will operate continuously during 2 hours without Thermo-OFF and the 3 minutes guard for compressor protection will be effective.*
- *Test run will start within 20 seconds after setting DSW1 pin 1 to ON position.*

◆ DSW2

Optional function setting

Function	DSW2 setting
Factory setting	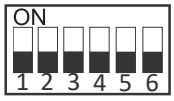

◆ DSW3

Outdoor unit setting

NOTE

All outdoor units come with the same DSW3 factory setting, being then characterised remotely at the moment of its manufacturing.

Outdoor unit	DSW3 setting
Factory setting	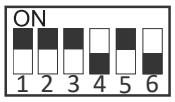

NOTE

In case of replacing the PCB1 with a new spare unit, the following settings must be taken into account to properly characterise the outdoor unit in which it is to be installed.

Outdoor unit	DSW3 setting
RASM-2VTW2E	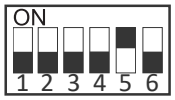
RASM-3VTW2E	
RASM-3.5VTW2E	
RASM-4VTW2E	
RASM-5VTW2E	
RASM-6VTW2E	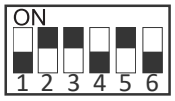
RASM-4TW2E	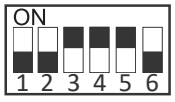
RASM-5TW2E	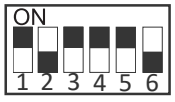
RASM-6TW2E	

◆ DSW4 / RSW1

Refrigerant cycle selection

NOTE

This setting is necessary when combining more than one unit in the same H-LINK in a system with ATW-YCC-04.

Function	DSW4 setting	RSW1 setting
Tens place / ones place	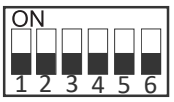	

◆ DSW5

Terminal resistance

NOTE

This setting is necessary when combining more than one unit in the same H-LINK in a system with ATW-YCC-04.

Function	DSW5 setting
Factory setting	

◆ DSW6

Function selection

Function	DSW6 setting
Factory setting	

◆ DSW7

Function selection

Function	DSW7 setting
Factory setting	

9.4.2.2 Outdoor unit PCB2 - Inverter (DRV075, only single-phase units)

◆ DSW1

Current detection cancellation

Function	DSW1 setting
Factory setting	
Current detection cancellation	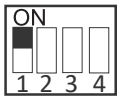

NOTE

This setting is necessary for maintenance tasks where the system has to be operated but with the compressor disconnected, since it cancels the current detection control for approximately 3 minutes.

9.4.2.3 Indoor unit PCB - Water cycle

◆ DSW1

Indoor unit type setting

Indoor unit	DSW1 setting
airH2O 800H - HWM-W2E(-B)	
airH2O 800H Combi - HWD-W2E-220S(-K)	
Control Box - ATW-CBX-01	

Enable cooling operation

Function	DSW1 setting
Cooling operation setting (in case of installing the cooling kit accessory)	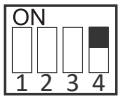

◆ DSW2 (setting required)

Unit capacity setting

Function	Outdoor units		DSW2 setting
	Capacity (HP)	Models	
Factory setting	-	-	
Setting required for combination with	2.0	RASM-2VTW2E	
	3.0	RASM-3VTW2E	
	3.5	RASM-3.5VTW2E	
	4.0	RASM-4(V)TW2E	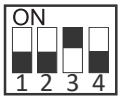
	5.0	RASM-5(V)TW2E	
	6.0	RASM-6(V)TW2E	

◆ DSW3

Additional setting 1

Function	DSW3 setting
Factory setting	
1 step heater for 3 phase unit option	

◆ DSW4

Additional setting 2

Function	DSW4 setting
Factory setting (except for HWM-W2E-B)	
DHW defrost	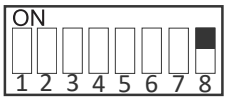
Heater forced OFF (HWM-W2E-B factory setting)	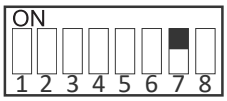
Unit and installation pipes antifreeze protection	
Standard / ECO water pump operation	
Electric heater or boiler emergency mode	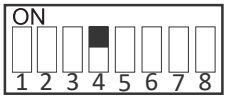
DHW tank's heater operation	
DHW 3 way valve forced ON	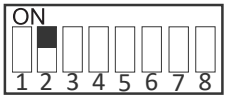

⚠ CAUTION

- *Never turn all DSW4 DIP switch pins ON. If this happens, the software of the unit will be removed.*
- *Never activate "Heater Forced OFF" and "Electric heater or boiler emergency mode" at the same time.*

◆ DSW5

Additional setting 3

In the cases where the outdoor unit is installed into a location where its own outdoor ambient temperature sensor cannot give a suitable temperature measurement to the system, it is available the 2nd outdoor ambient temperature sensor as accessory. By means of DSW5 setting, the preferable sensor for each circuit (C1 or C2) can be selected.

Function	DSW5 setting
Factory setting	
C1 : Outdoor unit sensor	
C1 : Auxiliary sensor	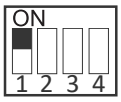
C2 : Outdoor unit sensor	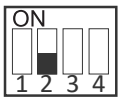
C2 : Auxiliary sensor	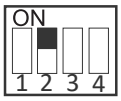
Use max (Two/Two3) for water control	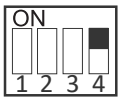

◆ DSW6 (only if available)

Not used

Function	DSW6 setting
Factory setting (do not change)	

◆ DSW7

Additional setting 4

Function	DSW7 setting
Factory setting	
Compatibility with ATW-RTU-04 (when cooling mode operation is needed)	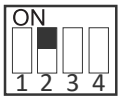

◆ DSW15 / RSW2

Refrigerant cycle address

Function	DSW15 setting	RSW2 setting
Factory setting	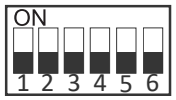	
Refrigerant cycle address setting (required only when Cascade Controller is installed)	Example of system setting with a value of: 5 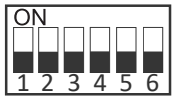	

◆ DSW16 / RSW1

Not used

Function	DSW16 setting	RSW1 setting
Factory setting (do not change)		

◆ DSW18

Not used

Function	DSW18 setting
Factory setting (do not change)	

◆ SSW1

Remote/Local

Function	SSW1 setting
Factory setting	REMOTE LOCAL 

◆ SSW2

Heat/Cool

Function	SSW2 setting
Factory setting	HEAT COOL 

◆ LED indication

Name	Colour	Indication
LED1	Green	Power indication
LED2	Red	Power indication
LED3	Red	Heat pump operation (Thermo ON/OFF)
LED4	Yellow	Alarm (flickering with 1 sec interval)
LED5	Green	Not used
LED6	Yellow	H-LINK transmission
LED7	Yellow	H-LINK transmission for unit controller

9.5 Optional indoor unit wiring (accessories)

9.5.1 Summary of the terminal board connections

◆ airH2O 800H - HWM-W2E(-B)

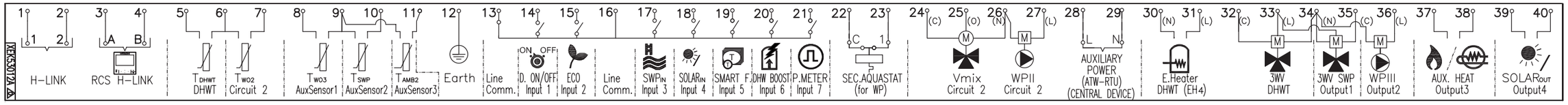

Mark	Part name	Description
	TERMINAL BOARD 1 (TB1)	
N	~ 230 V 50 Hz	Main power supply connection
L1		
L2	-	
L3		
	TERMINAL BOARD 2 (TB2)	
1	H-LINK communication	The H-LINK transmission has to be done between the indoor unit and the terminals 1-2 of either outdoor unit, ATW-RTU or any other central device.
2		
3	H-LINK communication for remote control switch	Terminals for the connection of the **airH2O 800** unit controller.
4		
5	DHW tank's thermistor	The DHW sensor is used to control the temperature of the domestic hot water tank.
6	Common thermistor	Common terminal for thermistor.
7	Thermistor for water outlet temperature of second cycle	The sensor is used for the second temperature control and should be positioned after the mixing valve and the circulation pump.
8	Thermistor for water outlet temperature of third cycle	The sensor is used for the third temperature control and should be positioned after the hydraulic separator, buffer tank or boiler combination.
9	Common thermistor	Common terminal for thermistors.
10	Thermistor for swimming pool water temperature	The sensor is used for the swimming pool temperature control and should be positioned inside plate heat exchanger of the swimming pool.
11	Thermistor for second ambient temperature	The sensor is used for the second ambient temperature control and it should be positioned outdoors.
12	Earth	Earth connection for the 3 way valve and water pump.
13	Common line	Terminal line common for input 1 and input 2.
14	Input 1 (Demand ON/OFF) (*)	The air to water heat pump system has been designed to allow the connection of a remote thermostat to effectively control your home's temperature. Depending on the room temperature, the thermostat will turn the air to water heat pump system ON and OFF.
15	Input 2 (ECO mode) (*)	Available signal which allows to reduce the water setting temperature of circuit 1, circuit 2 or both.
16	Common line	Terminal line common for inputs 3, 4, 5, 6, 7.
17	Input 3 (Swimming pool) (*)	Only for swimming pool installations: It is necessary to connect an external input to the air to water heat pump to provide signal when the water pump of swimming pool is ON.
18	Input 4 (Solar) (*)	Available input for Solar combination with Domestic Hot Water Tank.

Mark	Part name	Description
19	Input 5 (Smart function) (*)	For the connection of an external tariff switch device to switch OFF the heat pump during peak electricity demand period. Depending on the setting, the heat pump or DHWT will be blocked when signal is open/closed.
20	Input 6 (DHW boost) (*)	Available input for an instantaneous heating of the domestic hot water of the tank.
21	Input 7 (Power meter)	The measuring of the real power consumption can be done connecting an external power meter. The number of pulses of the power meter is a variable which must be set. By this, every pulse input is added into corresponding operation mode (Heating, Cooling, DHW Operation). Two possible options: - One power meter for all installation (indoor unit + outdoor unit). - Two separated power meters (one for indoor unit and one for outdoor unit).
22 23	Aquastat security for circuit 1 (WP1)	Terminals intended for the connection of the Aquastat security accessory (ATW-AQT-01) for controlling water temperature of the circuit 1.
24(C)	Mixing valve close	When a mixing system is required for a second temperature control, these outputs are necessary to control the mixing valve.
25(O)	Mixing valve open	
26(N)	Common line	Terminal line common for mixing valve and water pump 2.
27(L)	Water Pump 2 (WP2)	When there is a second temperature application, a secondary pump is the circulating pump for the secondary heating circuit.
28 29	Auxiliary power	Power supply for ATW-RTU and central device.
30(N) 31(L)	Electrical Heater DHW Output	If DHW tank contains an electric heater, the air to water heat pump can activate it if the heat pump cannot achieve the required DHW temperature by itself.
32(C)	3-way valve for DHW tank Output	The air to water heat pump can be used to heat DHW. This output will be ON when DHW is activated.
33(L)	Line (phase)	Line terminal for the 3-way valve for DHW tank and swimming pool.
34(N)	Common line (neutral)	Terminal line common for 3-way valve of DHW tank and outputs 1 and 2.
35(C)	Output 1 (3-way valve for swimming pool) (*)	The air to water heat pump can be use to heat swimming pool. This output will be ON when swimming pool is activated.
36(L)	Output 2 (Water pump 3 (WP3)) (*)	When there is a hydraulic separator or buffer tank, additional water pump (WP3) is needed.
37 38	Output 3 (Auxiliary boiler or electric heater) (*)	The boiler can be used to alternate with the heat pump when the heat pump cannot achieve the required temperature by itself. A water electric heater (as accessory) can be used to provide the additional heating required on the coldest days of the year.
39 40	Output 4 (Solar) (*)	Output for solar combination with Domestic Hot Water Tank.

(*): Inputs and outputs explained in the table are the factory-set options. By means of the unit controller, some other inputs and outputs functions can be configured and used. Please, refer to the Service Manual for detailed information.

airH2O 800H Combi - HWD-W2E-220S(-K)

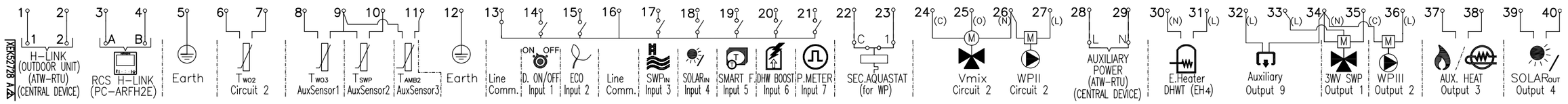

Mark	Part name	Description
	TERMINAL BOARD 1 (TB1)	
N	~ 230 V 50 Hz	Main power supply connection
L1		
L2	-	
L3		
	TERMINAL BOARD 2 (TB2)	
1	H-LINK communication	The H-LINK transmission has to be done between the indoor unit and the terminals 1-2 of either outdoor unit, ATW-RTU or any other central device.
2		
3	H-LINK communication for remote control switch	Terminals for the connection of the **airH2O 800** unit controller.
4		
5	Earth	Earth connection for accessories.
6	Common thermistor	Common terminal for thermistor.
7	Thermistor for water outlet temperature of second cycle	The sensor is used for the second temperature control and should be positioned after the mixing valve and the circulation pump.
8	Thermistor for water outlet temperature of third cycle	The sensor is used for the third temperature control and should be positioned after the hydraulic separator, buffer tank or boiler combination.
9	Common thermistor	Common terminal for thermistors.
10	Thermistor for swimming pool water temperature	The sensor is used for the swimming pool temperature control and should be positioned inside plate heat exchanger of the swimming pool.
11	Thermistor for second ambient temperature	The sensor is used for the second ambient temperature control and it should be positioned outdoors.
12	Earth	Earth connection for the 3 way valve and water pump.
13	Common line	Terminal line common for input 1 and input 2.
14	Input 1 (Demand ON/OFF) (*)	The air to water heat pump system has been designed to allow the connection of a remote thermostat to effectively control your home's temperature. Depending on the room temperature, the thermostat will turn the air to water heat pump system ON and OFF.
15	Input 2 (ECO mode) (*)	Available signal which allows to reduce the water setting temperature of circuit 1, circuit 2 or both.
16	Common line	Terminal line common for inputs 3, 4, 5, 6, 7.
17	Input 3 (Swimming pool) (*)	Only for swimming pool installations: It is necessary to connect an external input to the air to water heat pump to provide signal when the water pump of swimming pool is ON.
18	Input 4 (Solar) (*)	Available input for Solar combination with Domestic Hot Water Tank.
19	Input 5 (Smart function) (*)	For the connection of an external tariff switch device to switch OFF the heat pump during peak electricity demand period. Depending on the setting, the heat pump or DHWT will be blocked when signal is open/closed.
20	Input 6 (DHW boost) (*)	Available input for an instantaneous heating of the domestic hot water of the tank.

Mark	Part name	Description
21	Input 7 (Power meter)	The measuring of the real power consumption can be done connecting an external power meter. The number of pulses of the power meter is a variable which must be set. By this, every pulse input is added into corresponding operation mode (Heating, Cooling, DHW Operation). Two possible options: - One power meter for all installation (indoor unit + outdoor unit). - Two separated power meters (one for indoor unit and one for outdoor unit).
22 23	Aquastat security for circuit 1 (WP1)	Terminals intended for the connection of the Aquastat security accessory (ATW-AQT-01) for controlling water temperature of the circuit 1.
24(C)	Mixing valve close	When a mixing system is required for a second temperature control, these outputs are necessary to control the mixing valve.
25(O)	Mixing valve open	
26(N)	Common line	Terminal line common for mixing valve and water pump 2.
27(L)	Water Pump 2 (WP2)	When there is a second temperature application, a secondary pump is the circulating pump for the secondary heating circuit.
28 29	Auxiliary power	Power supply for ATW-RTU and central device.
30(N) 31(L)	Electrical Heater DHW Output	If DHW tank contains an electric heater, the air to water heat pump can activate it if the heat pump cannot achieve the required DHW temperature by itself.
32	Output 9	
33(L)	Line (phase)	Line terminal for valve accessories.
34(N)	Common line (neutral)	Terminal line common for outputs 1, 2 and 9.
35(C)	Output 1 (3-way valve for swimming pool) (*)	The air to water heat pump can be use to heat swimming pool. This output will be ON when swimming pool is activated.
36(L)	Output 2 (Water pump 3 (WP3)) (*)	When there is a hydraulic separator or buffer tank, additional water pump (WP3) is needed.
37 38	Output 3 (Auxiliary boiler or electric heater) (*)	The boiler can be used to alternate with the heat pump when the heat pump cannot achieve the required temperature by itself. A water electric heater (as accessory) can be used to provide the additional heating required on the coldest days of the year.
39 40	Output 4 (Solar) (*)	Output for solar combination with Domestic Hot Water Tank.

(*): Inputs and outputs explained in the table are the factory-set options. By means of the unit controller, some other inputs and outputs functions can be configured and used. Please, refer to the Service Manual for detailed information.

Control Box - ATW-CBX-01

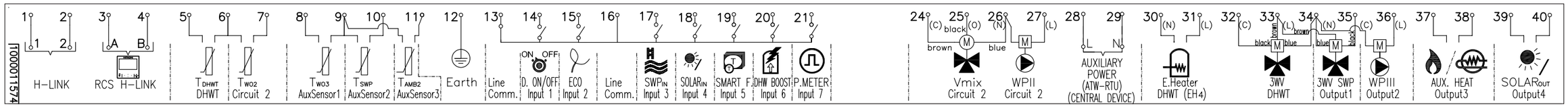

Mark	Part name	Description
		TERMINAL BOARD 2 (TB2)
1 2	H-LINK communication	The H-LINK transmission has to be done between the Control Box and the outdoor unit. Additionally, it can also be done between the Control Box and the ATW-RTU, the Cascade Controller or any other central device.
3 4	H-LINK communication for remote control switch	Terminals for the connection of the **airH2O 800** unit controller.
5	DHW tank's thermistor	The DHW sensor is used to control the temperature of the domestic hot water tank.
6	Common thermistor	Common terminal for thermistor.
7	Thermistor for water outlet temperature of second cycle	The sensor is used for the second temperature control and should be positioned after the mixing valve and the circulation pump.
8	Thermistor for water outlet temperature after hydraulic separator	The sensor is used for the third temperature control and should be positioned after the hydraulic separator, buffer tank or boiler combination.
9	Common thermistor	Common terminal for thermistors.
10	Thermistor for swimming pool water temperature	The sensor is used for the swimming pool temperature control and should be positioned inside plate heat exchanger of the swimming pool.
11	Thermistor for second ambient temperature	The sensor is used for the second ambient temperature control and it should be positioned outdoors.
12	Earth	Earth connection for the 3 way valve and water pump.
13	Common line	Terminal line common for input 1 and input 2.
14	Input 1 (Demand ON/OFF) (*)	The air to water heat pump system has been designed to allow the connection of a remote thermostat to effectively control your home's temperature. Depending on the room temperature, the thermostat will turn the air to water heat pump system ON and OFF.
15	Input 2 (ECO mode) (*)	Available signal which allows to reduce the water setting temperature of circuit 1, circuit 2 or both.
16	Common line	Terminal line common for inputs 3, 4, 5, 6, 7.
17	Input 3 (Swimming pool) (*)	Only for swimming pool installations: It is necessary to connect an external input to the air to water heat pump to provide signal when the water pump of swimming pool is ON.
18	Input 4 (Solar) (*)	Available input for Solar combination with Domestic Hot Water Tank.
19	Input 5 (Smart function) (*)	For the connection of an external tariff switch device to switch OFF the heat pump during peak electricity demand period. Depending on the setting, the heat pump or DHWT will be blocked when signal is open/closed.
20	Input 6 (DHW boost) (*)	Available input for an instantaneous heating of the domestic hot water of the tank.
21	Input 7 (Power meter)	The measuring of the real power consumption can be done connecting an external power meter. The number of pulses of the power meter is a variable which must be set. By this, every pulse input is added into corresponding operation mode (Heating, Cooling, DHW Operation). Two possible options: - One power meter for all installation (indoor unit + outdoor unit). - Two separated power meters (one for indoor unit and one for outdoor unit).

Mark	Part name	Description
24(C)	Mixing valve close	When a mixing system is required for a second temperature control, these outputs are necessary to control the mixing valve.
25(O)	Mixing valve open	
26(N)	Common line (neutral)	
27(L)	Water Pump 2 (WP2)	When there is a second temperature application, a secondary pump is the circulating pump for the secondary heating circuit.
28 29	Auxiliary power	Power supply for ATW-RTU and central device
30(N) 31(L)	Electrical Heater DHW Output	If DHW tank contains an electric heater, the air to water heat pump can activate it if the heat pump cannot achieve the required DHW temperature by itself.
32(C)	3-way valve for DHW tank Output	The air to water heat pump can be used to heat DHW. This output will be ON when DHW is activated.
33(L)	Line (phase)	Line terminal for the 3-way valve for DHW tank and swimming pool.
34(N)	Common line (neutral)	Neutral terminal common for 3-way valve of DHW tank and outputs 1 and 2.
35(C)	Output 1 (3-way valve for swimming pool) (*)	The air to water heat pump can be use to heat swimming pool. This output will be ON when swimming pool is activated.
36(L)	Output 2 (Water pump 3 (WP3)) (*)	When there is a hydraulic separator or buffer tank, additional water pump (WP3) is needed.
37 38	Output 3 (Auxiliary boiler or electric heater) (*)	The boiler can be used to alternate with the heat pump when the heat pump cannot achieve the required temperature by itself. A water electric heater (as accessory) can be used to provide the additional heating required on the coldest days of the year.
39 40	Output 4 (Solar) (*)	Output for solar combination with Domestic Hot Water Tank.

(*): Inputs and outputs explained in the table are the factory-set options. By means of the unit controller, some other inputs and outputs functions can be configured and used. Please, refer to the **airH2O 800** *and the PC-ARFH3E technical documentation and operation manual for detailed information.*

Additional configurations

10.1 Additional configurations 129
10.1.1 For commissioning 129
10.1.2 To protect the system 129
10.1.3 User comfort for space heating and space cooling 130
10.1.4 Options available when using Hitachi wired or wireless thermostat 130
10.1.5 Controls for power consumption or noise reduction 131
10.1.6 For energy and capacity calculation 131
10.1.7 For unit operation 132
10.1.8 To customise hydraulic installation 133
10.1.9 For DHW operation 133
10.2 Optional external input, output and sensor configuration signals 134
10.2.1 Input signals and input ports 135
10.2.2 Output signals and output ports 136
10.2.3 Additional functions by accessory sensor 139
10.2.3.1 Function of sensors 139
10.3 Outdoor unit optional functions 140
10.3.1 Change of defrost condition 140
10.3.2 Outdoor crankcase heater management 140
10.3.3 Fixed target setting for primary water pump 141
10.3.4 Selecting the drain heater operating pattern 142
10.3.5 Outdoor fan management 142

10.1 Additional configurations

For more information refer to the Service Manual.

10.1.1 For commissioning

- **Outdoor unit functions:** to configure outdoor unit optional functions. Configuring outdoor optional functions is as simple as introducing new values to the LCD and they are transferred to the outdoor unit. This new way to set optional function avoids outdoor unit manipulation.

  The adjustment of optional functions can be performed manually via the controller, through data transfer with NFC, or via the CSNET Home Pro platform.
- **Unit test run:** Test run is a working mode used when commissioning the installation. Some settings are made to let the installer an easy job.
- **Air purge:** Air purge function drives the pump in a way for evacuating air bubbles in the installation.
- **3WV move for tank filling:** By means of DSW4#2 being set to ON, the 3WV (3-way valve) is forced in tank position. This option becomes useful when it is required to fill the circuit with water for the first time. Set DSW4#2 to OFF position before starting operation.
- **Floor screed drying function:** This function is used exclusively for the process of drying a newly applied screed to the floor heating system. The water temperature set-point follows a predetermined schedule upon activation of the floor screed drying function.
- **Hot start control release:** Allows installers to bypass the pre-heating phase of the unit when it is cold, enabling immediate start-up.
- **Remote defrost request:** During commissioning or maintenance tasks it may be useful to force a defrost operation. This operation can be performed from the indoor unit PCB by pressing PSW1 and PSW4 at the same time.
- **NFC Configuration:** The NFC capabilities of the **airH2O 800** LCD controller enables effortless configuration of all LCD parameters. This includes settings such as timers and schedules, providing full control over the unit's operation.

10.1.2 To protect the system

- **Unit and pipes freeze protection control:** By means of the DSW4#6 it is possible to enable the control that protects the unit and water pipes from freezing conditions. During period of inactivity where water pump is OFF, this control checks the temperature of the water sensors. In case the temperature decreases close to the freeze point, water pump is started with the purpose to move the water.
- **Seizure protection for hydraulic components:** By means of this function, water components such as water pumps and 3-way valve are started once a day during inactivity period to protect against the seizure during long inactivity times.

10.1.3 User comfort for space heating and space cooling

This section collects all functions the purpose of which is to enhance comfort of the user:

- **User offset:** If the water temperature setting for zones, as determined by the OTC curve or gradient, does not meet the immediate requirements, the user has the option to apply a ±5 offset from the Unit LCD without the need to modify advanced parameters.
- **Outdoor temperature average timer:** The average timer corrects the influence of ambient temperature variations. The weather-dependent set point calculation is done on the average outdoor temperature. The outdoor temperature is averaged over the selected time period.
- **Electric heater usage to extend water temperature setting (space heating only):** By selecting "Extend the working range" setting on LCD, electric heater can be used to provide extra water temperature at low ambient temperature conditions where the maximum temperature that can be provided by the heat pump is reduced due to thermodynamic limitations.
- **Emergency operation:** For the use of the electrical heater or boiler in case of outdoor unit fault, additional setting shall be applied into the indoor unit. Electrical heater emergency can be both automatic or manual switched ON by the user.
- **Mixing valve regulation during DHW operation:** For those installations with C1 and C2 circuits where C1 circuit has a very high inertia, it becomes possible to allow the mixing kit valve to regulate even during DHW operation with the purpose to keep providing energy to C2 circuit. In the same way, in case there is not enough inertia on the system, by means of the LCD configuration it can be specified that mixing kit is closed during tank operation with the purpose to avoid energy loss on C2.

10.1.4 Options available when using Hitachi wired or wireless thermostat

- **Room temperature compensation:** Purpose of this functionality is to improve user comfort by adjusting water temperature on the installation. After **airH2O 800** has determined the proper water temperature setting by means of OTC curve or gradient, the water temperature setting is afterwards increased or decreased in function of the room temperature setting and the real room temperature as follows:

  ✓ In Heating mode:

  - In case room temperature is above room temperature setting, water temperature setting is decreased with the purpose to reduce the thermal load and therefore reduce the power consumption.
  - In case room temperature is below room temperature setting, water temperature setting is increased with the purpose to speed-up heating operation and achieve desired room temperature as fast as possible.

  ✓ In Cooling mode:

  - In case room temperature is below room temperature setting, water temperature setting is increased with the purpose to reduce the thermal load and therefore reduce the power consumption.
  - In case room temperature is above room temperature setting, water temperature setting is decreased with the purpose to speed-up cooling operation and achieve desired room temperature as fast as possible.

- **Room temperature demand OFF adjustment:** With the purpose to allow heat pump regulation and therefore reduce power consumption it is possible to adjust the amount of degrees it is allowed to overpass room temperature setting before performing demand OFF.

  It is also possible to “Deactivate” this control. When deactivated, system does never perform demand OFF operation. In that case, thanks to room temperature compensation control, water setting temperature is adjusted and system stops the heat pump by Thermo-OFF after reducing the compressor frequency as much as possible and therefore reduce power consumption of the unit.

10.1.5 Controls for power consumption or noise reduction

- **Economic offset water setting:** Water temperature for space heating and cooling can be modified with the purpose to reduce power consumption of the system. Economic mode can be launched by means of a timer or by an input function.
- **Reduction of the maximum heating step:** Electric heater has 3 steps. All **airH2O 800** controls that use electrical heaters are allowed to use all 3 steps unless they are limited with a maximum value configured on the LCD.
- **Smart grid / Smart function:** This function can be used to block or limit the heat pump or increase demand due to electricity availability. Demand increase is configurable for heating and also for cooling operation.
- **Smart function by timer:** Smart function has the purpose to reduce consumption of the unit. For specific installation, such consumption reduction is desired to be done at a given moment of the day. In this case a timer allows to start Smart function operation without need of setting an input signal.
- **Night shift:** Night shift operation reduces compressor load in order to reduce environmental noise during night. It can be configured as a daily timer. Night shift can be activated by setting an input signal or from the CSNET Home app.

10.1.6 For energy and capacity calculation

- **System consumption data: airH2O 800** unit performs an estimation of the system consumption. For a real power consumption measure, it is necessary to connect an external power meter.

  No power meter connected: The estimation of the system consumption includes outdoor unit, pumps, heaters and electronics. Such consumption estimation is showed on the unit controller. Since it is an estimation, consumption may differ from real measurements by means of an external power meter.
- **Power meter data control:** The number of pulses of the power meter is a variable which must be set through the unit controller. By this, every pulse input is added into its corresponding operation mode (Heating, Cooling, DHW Operation). Two possible options:
  - One power meter for all installation (indoor unit + outdoor unit).
  - Two separated power meters (one for indoor unit and one for outdoor unit).
- **Capacity calculation:** Due to usage of water temperature inlet and outlet + water flow level, a estimation of capacity can be checked.

- **Efficiency calculation:** The system is able to calculate the energy efficiency of the system. This data is obtained from the energy consumed divided by the capacity provided by the unit. Having values higher than 1 implies that the system is able to provide more energy than the energy consumed. Usage of electric heaters reduce this figure.

NOTE

Since capacity and input counters may not always align in the same time frame, this can slightly affect the accuracy of the result.

10.1.7 For unit operation

- **Heating Auto ON/OFF:** At higher outside temperatures it doesn't make sense to keep heating the building. The **airH2O 800** system will switch the heating off when the daily average outdoor temperature of previously day rises above the Summer Switch Auto ON/OFF Activation Temperature.
- **Auto Heat-Cool:** Only available for Cooling and Heating models and cooling mode enabled. By using auto summer switch off average, user can use auto heat cool mode. The end-user sets the desired operation mode on the user interface: Heating, Cooling or Automatic. When Automatic is selected, the change of the operation mode is based on:
- **Averaged outdoor temperature:** the operation mode will be changed in order to always be within range determined by the space heating OFF temperature for heating and the space cooling ON temperature for cooling. If the outdoor temperature drops, the operation mode switches to heating and vice versa.
- **Holiday mode:** This menu lets the user specify a date and hour for the room setting to be OFF with the configured setting.
- **Temperature offset determination for Thermo-ON transition:** Depending on temperature conditions and the load of the system, the heat pump performs transitions to Thermo-OFF's. By means of Thermo-ON Heating Offset and Thermo-ON Cooling offset editable from the LCD, it is possible to configure the required temperature change of the Twi sensor to perform again the Thermo-ON's operation compared with the value of Twi at the moment of the Thermo-OFF's transition.

  The higher is the setting, the lower will be the number of Thermo-ON's transitions and therefore energy consumption will decrease. On the other hand, the efficiency of the next Thermo-ON operation will increase since operation will be longer than before and the system will adapt the provided capacity to the real load of the installation.
- **Remote management of the unit:** Thanks to ATW-IOT-02 the unit can be managed remotely by means of CSNET Home App or monitored by means of installers from CSNET Home Pro.

10.1.8 To customise hydraulic installation

- **Hydraulic separator:** In the case of the Hydrosplit system, a hydraulic separator, buffer tank and water pumps are already featured. In the case of the Control Box system, there is only a water pump that can be directly connected to the installation. In some cases, the **airH2O 800** system may not be sized for a bigger heating installation (insufficient water pump). In this case, an additional hydraulic separator or buffer tank and a water pump have to be used to ensure proper water pump dimensioning. Additional water sensor (Two3) is needed for boiler combination control (automatically added when boiler combination is enabled).
- **DHW tank position (only for airH2O 800H):** Whenever there is an additional buffer tank or hydraulic separator, user can select position of DHW external tank with respect to the hydraulic separator. This means that it is possible to place the 3WV and DHW tank before or after the hydraulic separator. In case the 3WV valve and DHW tank are placed before the buffer tank, only the tank's coil will be heated up to the required temperature instead of increasing also the temperature of the whole buffer tank whenever DHW operation is performed.
- **Pumps setup:** This option allows to configure between 2 hydraulic schemes when an additional hydraulic separator is used. Standard configuration forces WP3 to operate whenever there is demand from Circuit 2. On the other hand, Parallel configuration, allows to connect WP3 and WP2 to the buffer tank, and operation of WP3 is independent to the operation of WP2.
- **Stop conditions setting for WP1:** For specific installations where **airH2O 800** unit is installed to feed a big buffer tank, **airH2O 800** unit is working in constant demand ON and only stopping when water temperature reaches setting temperature.
- **Fan coil management:** In case fan coil is selected as a heating/cooling emitter, fan speeds can be controlled from room thermostat and fan coil's fan speeds are controlled from **airH2O 800** optional outputs.

10.1.9 For DHW operation

- **DHW anti-Legionella protection:** A specific setting is available to protect the DHW system against Legionella, which raises up the DHW temperature over the normal DHW tank temperature setting (using the electric heater of the DHW tank and/or the heat pump) on a periodic basis.
- **DHW re-circulation:** This function allows the activation of the water pump for the re-circulation of the hot water from the DHW tank by means of the heat pump. This function can also be used with the anti-legionella protection function.
- **DHW boost:** With this function enabled, it is possible to request a heating up of the DHW when user requires an instantaneous delivery of DHW.
- **Demand:** DHW operation has 3 different modes, ECONOMIC (only for **airH2O 800H Combi** units), STANDARD and HIGH DEMAND :
  - ✓ ECONOMIC mode: The heating of the domestic hot water shall be started when water temperature in tank is low enough for the heat pump to be started measured with the top most tank thermistor. DHW is always started heated by the heat pump. Using this mode, it is reduced the amount of heating up procedures.
  - ✓ STANDARD mode: Behaves the same as ECONOMIC mode but it is used the lowest tank sensor to judge water temperature inside tank. This functionality ensures higher quantity of

water already heated inside of tank and heating-up process are more frequent.

✓ HIGH DEMAND mode: The heating of the domestic hot water is started if differential is bigger than T_{DHWON}. It will be started with water tank heater only unless water temperature in tank goes below heat pump starting temperature measured with the lowest sensor on tank.

10.2 Optional external input, output and sensor configuration signals

The system has 7 input and 4 output optional signals (in case of **airH2O 800H** and Control Box) or 5 output optional signals (in case of **airH2O 800H Combi**) and 4 additional output signals when using the auxiliary output signal box (ATW-AOS-02). The new **airH2O 800** series allow different ports to be configured for those I/O signals, as well.

The user can configure those input signals to perform different functions from the unit controller.

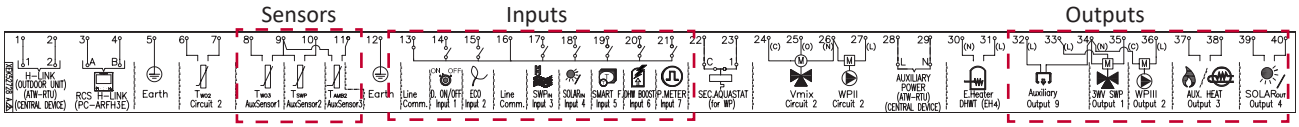

airH2O 800H Combi *Terminal Board 2*

The following input, output and sensor functions can be selected in the “I/O and Sensor” menu of the controller:

Optional Outputs:
There are 4 additional available outputs to set. These 4 additional outputs are not wired to the **airH2O 800** terminal board.
In order to use them, an accessory (ATW-AOS-02) is required. Its configuration follows the same constraints as “Standard outputs”.

Auxiliary Sensors:
There are 7 available auxiliary sensors to set.

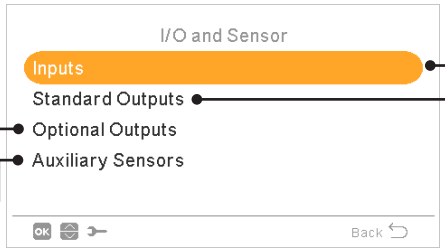

Inputs:
The system allows to set 7 inputs depending on the operations and preferences of the installation.

Standard Outputs:
There are 4 available outputs for **airH2O 800H** and Control Box, and 5 for **airH2O 800H Combi** models to set already wired to the terminal board. There are conditions of setting depending on the installation.

10.2.1 Input signals and input ports

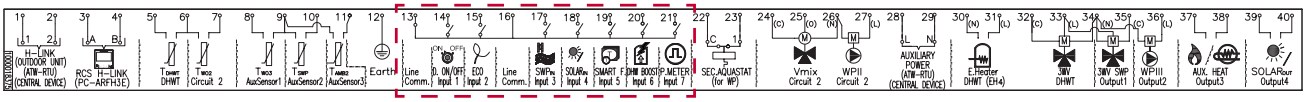

airH2O 800H *and Control Box Terminal Board 2*

Name	Port	Input
Input 1	#13 and 14	230 V
Input 2	#13 and 15	230 V
Input 3	#16 and 17	230 V
Input 4	#16 and 18	230 V
Input 5	#16 and 19	230 V
Input 6	#16 and 20	230 V
Input 7	#16 and 21	230 V

◆ List of available inputs

Deactivated	
Demand-ON/OFF	By default in input 1. Send Demand-ON or OFF Operation to Circuit 1 and Circuit 2.
Smart Action	Fixed in input 5 if smart action is enabled. This function must be used to block or limit the heat pump when restricted by Electric company. It allows an external Smart switch device to switch off or reduce consumption of the heat pump during time of peak electricity demand. In case Smart action is configured as Smart Grid Ready (SG1), an adittional input is required to be configured as SG2. These 2 inputs allow 4 diferent operation modes: Standard HP mode, External blocking mode, Low price mode, Overcapacity mode.
Swimming pool	Fixed in input 3 if swimming pool is enabled. Input used to let **airH2O 800** know swimming pool is in Demand-ON conditions.
Solar	Fixed in input 4 if solar is enabled. In case of combining **airH2O 800** with solar panels, this input is used as a feedback for solar station ready operation.
Operation mode	Cool/Heat must be changed by an input of an external contact signal. Contact signal is edge detection; Cool/Heat changeover by unit controller is also available.
DHW boost	Fixed in input 6 if DHW Boost is enabled. With this function enabled, it is possible to request a heating up of the DHW when user requires an instantaneous delivery of DHW.
Power meter 1	Input used as kWh pulse count for Energy data recording.
Demand-ON/OFF C1	Send Demand-ON or OFF Operation only to Circuit 1.
Demand-ON/OFF C2	Send Demand-ON or OFF Operation only to Circuit 2.
Forced Heating	Forced Heating Demand by input of contact signal from outside.
Forced Cooling	Forced Cooling Demand by input of contact signal from outside.
Power meter 2	Input used as kWh pulse count for Energy data recording.

ECO mode C1 and C2	Water temperature setting for Circuit 1 and Circuit 2 is reduced by ECO operation mode (default 3°C) by input of contact signal from outside.
ECO mode C1	By default in input 2, if there is Circuit 1 in the installation. Water temperature setting for Circuit 1 is reduced by ECO operation mode (default 3°C) by input of contact signal from outside.
ECO mode C2	Water temperature setting for Circuit 2 is reduced by ECO operation mode (default 3°C) by input of contact signal from outside.
Force OFF	Force OFF operation for unit. RCS will continue as normally set but will show indication that operation is forbidden.
Smart Grid Ready Input 2	In case Smart action is configured as Smart Grid Ready (SG1), this input is used as a digital input 2 and allow four different operating modes.
Night shift	Set the unit in Night shift mode.
Drain pump	In case of configuring this input, alarm is triggered in case input contact is opened. This input can be linked to drain pump kit accessory located at drain pan which by means of a NC contact, notifies there is possibility of water overflow.

10.2.2 Output signals and output ports

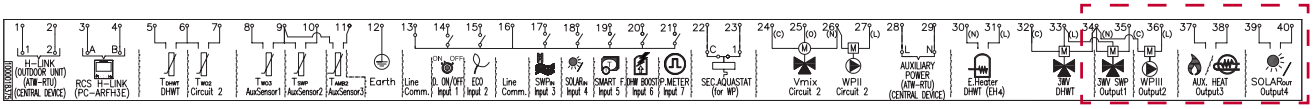

airH2O 800H *and Control Box Terminal Board 2*

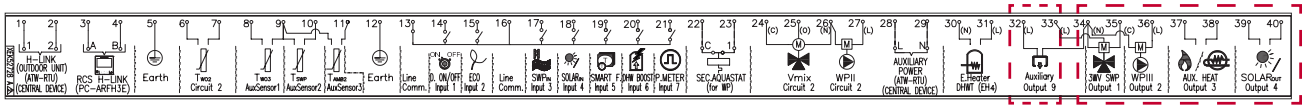

airH2O 800H Combi *Terminal Board 2*

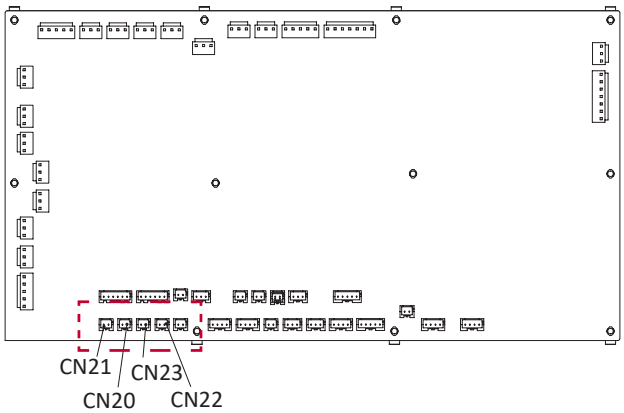

airH2O 800H, airH2O 800H Combi *and Control Box PCB*

Standard Outputs

Name	Port	Output
Output 1	#34 and 35	230 V
Output 2	#34 and 36	230 V
Output 3	#37 and 38	Free voltage signal
Output 4	#39 and 40	Free voltage signal
Output 9 (only for **airH2O 800H Combi**)	#32 and 34	230 V

Optional Outputs

Name	Port	Output
Output 5	CN20 #1-2	12 VDC signal
Output 6	CN21 #1-2	12 VDC signal
Output 7	CN22 #1-2	12 VDC signal
Output 8	CN23 #1-2	12 VDC signal

List of available outputs

Deactivated	
3WV SWP	Fixed in output 1 if swimming pool is enabled. In case of combining **airH2O 800** with swimming pool, this output is used to drive 3 way valve swimming pools.
WP3	Fixed in output 2 if buffer tank is installed. In case of combining **airH2O 800** with boiler or hydraulic separator, this output is used to drive water pump 3.
Boiler combination	Fixed in output 3 if boiler is enabled. In case of combining **airH2O 800** with boiler, this output is used to switch it ON.
Solar pump	Fixed in output 4 if solar pump is enabled. In case of combining **airH2O 800** with solar panel, this output is used to drive water pump station .
Alarm signal	By default in output 5. Output when an “Alarm Code” is received from indoor unit or outdoor unit.
Operation signal	By default in output 6. Output in case that "Thermo-ON" signal in any condition.
Cooling signal	By default in output 7. Output in case that "Thermo-ON" signal in Cooling operation.
Demand-ON signal circuit 1	By default in output 8. Signal is enabled when Circuit 1 is operating in Demand-ON.
Heating signal	Output in case that "Thermo-ON" signal in Heating operation.
DHW signal	Output in case that "Thermo-ON" signal in DHW operation.
Solar overheat	Output in case that solar temperature signal is active when solar overheat (only when solar combination status is total control).
Defrost	Output if the operation state of the outdoor unit when is defrosting.

DHW re-circulation pump	In case of re-circulation pump enabled for DHW tank.
Heater Relay 1	Not available
Heater Relay 2	Not available
Fan 1 Low speed	Output for fan coil speed.
Fan 1 Medium speed	Output for fan coil speed.
Fan 1 High speed	Output for fan coil speed.
Fan 2 Low speed	Output for fan coil speed.
Fan 2 Medium speed	Output for fan coil speed.
Fan 2 High speed	Output for fan coil speed.
Constant heat	Output in high state whenever operation mode from unit controller is in heating mode.
Constant cool	Output in high state whenever operation mode from unit controller is in cooling mode.

10.2.3 Additional functions by accessory sensor

Hitachi offers to its users the option to add more functions to the inputs from signals coming from some specific sensors. The configuration for this purpose is explained below:

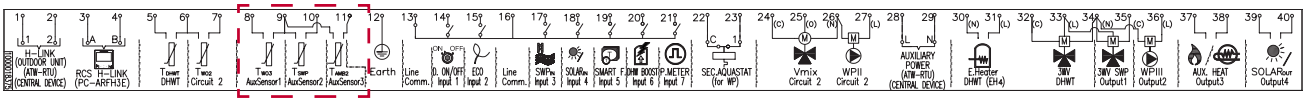

airH2O 800H *and Control Box Terminal Board 2*

10.2.3.1 Function of sensors

Deactivated	
T_{WO3} sensor	Fixed in sensor 1 if boiler is installed. T_{wo3} sensor is required when there is external an heating source or useful to track better temperature when there is a hydraulic separator or buffer tank.
Swimming pool	Fixed in sensor 2 if swimming pool is installed. When combining **airH2O 800** with swimming pool, this sensor is used to read the temperature from the water of the swimming pool.
Solar panel sensor	When combining **airH2O 800** with solar panels, this sensor is used to read the temperature from the solar panel.
C1 + C2 ambient sensor	If Aux1 and Aux2 sensors are both connected and enabled at the unit controller configuration, the detection of ambient temperature value is carried out by these sensors. The ambient temperature setting for each circuit is set from the unit controller or central platform. The temperature value detected by each sensor is applied to the corresponding circuit.
C1 ambient sensor	If Aux1 and Aux2 sensors are both connected and enabled at the unit controller configuration, the detection of ambient temperature value is carried out by these sensors. The ambient temperature setting for each circuit is set from the unit controller or central platform. The temperature value detected by each sensor is applied to the Circuit 1.
C2 ambient sensor	If Aux1 and Aux2 sensors are both connected and enabled at the unit controller configuration, the detection of ambient temperature value is carried out by these sensors. The ambient temperature setting for each circuit is set from the unit controller or central platform. The temperature value detected by each sensor is applied to the Circuit 2.
Outdoor sensor	By default sensor 3. An outside temperature sensor can be directly connected to the controller in case the heat pump is located in a position not suitable for this measurement.

10.3 Outdoor unit optional functions

NOTE

The setting of the outdoor unit optional functions is done via the LCD controller or the CSNET Home Pro application.

10.3.1 Change of defrost condition

◆ dA - Change of defrost condition

- **Description:** This function enables the adjustment of temperature conditions to induce an earlier defrosting operation for dA : 1. It proves particularly beneficial in installations located in extremely cold regions where continuous frost formation occurs. Initiating an earlier defrosting operation minimises the accumulation of frost, ensuring higher heating capacity values. dA :2 allows the unit to defrost on those environments where there is lack of humidity and the outdoor unit heat exchanger degradation is low.

Standard specifications (factory default state)	Cold region	Dry region
Function selection setting dA :0	Function selection setting dA : 1	Function selection setting dA :2
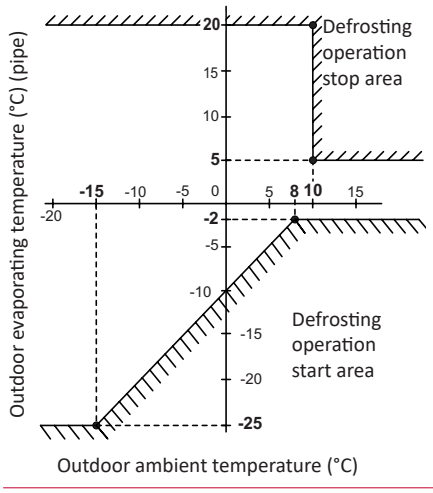	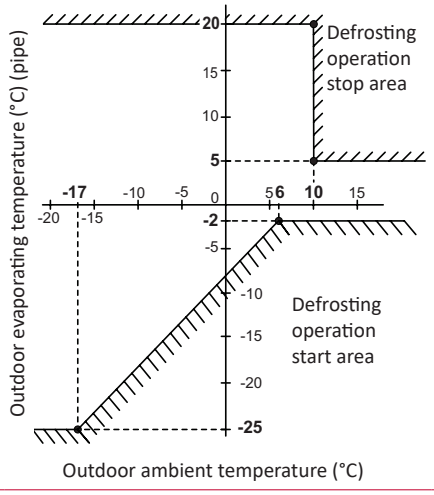	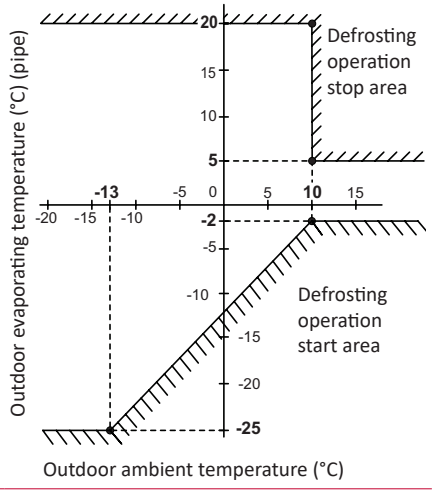

CAUTION

Do not modify this setting unless there is a specific issue to be solved.

10.3.2 Outdoor crankcase heater management

◆ F8 - Crankcase heater control during stoppage

- **Description:** This optional function enables the stoppage of the crankcase heater in the outdoor unit when the **airH2O 800** unit is turned OFF or in “Demand-OFF” mode.

◆ HT - Cancellation of hot start

- **Description:** When the FB function is activated, the crankcase heater remains OFF when the **airH2O 800** unit is OFF or in Demand-OFF. Upon the **airH2O 800** unit requesting the outdoor unit to start, the outdoor unit initiates a compressor pre-heating operation. During this pre-heating, the crankcase heater is switched ON, and compressor operation is temporarily forced OFF. This forced OFF state is released once the compressor reaches a sufficient temperature to start operation, a process that may last up to 4 hours.
  Enabling optional function HT to 1: Allows the outdoor unit to skip the compressor pre-heating operation and start immediately when operation is requested. This means the compressor will start with a crankcase temperature lower than its optimal value. Caution is advised, especially in situations where compressor starting at ambient temperatures below 10°C is expected, as low oil viscosity may lead to compressor damage.

10.3.3 Fixed target setting for primary water pump

◆ FA - Fixed target setting for primary water pump

The primary water pump speed control has been designed to be self-adjusted. The autonomous control is designed to ensure a water flow higher than the secondary water flow with the purpose to guarantee a proper temperature transfer between primary and secondary water loops and also guarantee the nominal flow for the heat pump. On the other hand, the secondary water pump located at the indoor unit reduces its water pump speed in case the primary water pump speed is already set at its maximum speed and yet the primary water flow is lower than the secondary water flow.

With this scenario, the only water pump setting to be done is the one of the secondary water pump, which is adjusted by means of the LCD with the purpose to fulfil the flow requirements of the selected emitters.

In case the autonomous water pump speed control is desired to be disabled, software allows to fix the primary water pump speed setting by means of the optional function FA as follows:

FA	Setting
0	ODU pump Free mode
1	Pump 100%
2	Pump 90%
3	Pump 80%
4	Pump 70%
5	Pump 60%
6	Pump 50%

When the value of FA optional function is set, flow control for primary and secondary water loop are isolated and pumps operate according to the configured target speed. Primary water pump at outdoor unit follows FA optional function and secondary water pump at indoor unit follows pump target speed configured on the LCD. Under this conditions the control that forces that primary water flow to be bigger than secondary water flow is disabled and water flow adjustment shall be done manually.

When system is using Control Box, there is no secondary water pump managed by the indoor unit. In this case the adjustment of the primary water pump located at the outdoor unit is done by means of the indoor unit LCD. Note that the target is set on the indoor unit LCD. However, in case the flow provided by the outdoor unit is not the desired one, the primary water pump target can also be adjusted according to the FA optional function.

10.3.4 Selecting the drain heater operating pattern

◆ Hc - Selecting the drain heater operating pattern

This parameter allows to select the operating pattern of the drain heater in function of the desired usage.

HC : 0, this is the default value. The drain heater is switched ON when ambient temperature is lower than 5°C and only when the outdoor unit is in operation performing defrosts cycles. The purpose of this setting is to avoid frost formation at the base of the unit when ice is melted during the defrost operation.

HC : 1, this setting allows the deactivation of the drain heater.

HC : 2, this setting forces a constant operation of the drain heater based on ambient temperature only. This means that it will be switched ON when ambient temperature is lower than 5°C in any case and it will only be switched OFF in case ambient temperature is higher than 5°C. This setting is designed to be applied for extreme cold climate conditions where it is desired to avoid frost formation at the base of the unit even when it is not in operation. In this case it could be created due to the accumulation of snow.

10.3.5 Outdoor fan management

◆ F4 - Outdoor unit maximum fan step reduction for noise reduction (heating mode only)

- **Description:** In heating mode, the outdoor unit fan is controlled to operate at the lowest possible speed while still maintaining the required system capacity.

If the fan speed becomes uncomfortable due to noise, the optional function F4 allows to limit the maximum fan step. This helps reduce noise levels by capping the maximum fan step as follows:

F4	Fan step reduction
0	0
1	1
2	2
3	3

NOTE

Limiting the maximum fan step reduces the airflow of the outdoor unit. As a result, the interval between defrost operations becomes shorter, and the heating capacity may decrease.

Complementary system: Cascade controller

11.1 Main features 145
11.1.1 Multi configurations 145
11.1.2 Installation benefits 146
11.1.3 Maintenance benefits 149
11.1.4 Control features 150
11.1.5 Cascade control 153
11.1.6 Rotary token control 154
11.1.7 Synchronized defrost 155
11.2 General data 155
11.3 Electrical data 155
11.4 Electrical wiring 156
11.5 Transmission wiring 157
11.5.1 Connections on the Terminal board 1 (TB1) 157
11.5.2 Connections on the Terminal board 2 (TB2) 157
11.5.3 Summary of the terminal board connections for Cascade Controller ... 160
11.5.4 Location of DIP switches and rotary switches 162
11.5.4.1 Function of DIP switches and rotary switches 162
11.5.4.2 DSW1 163
11.5.4.3 DSW2 163
11.5.4.4 DSW3 164
11.5.4.5 DSW4 164
11.5.4.6 DSW5 165
11.5.4.7 DSW6 (only if available) 165
11.5.4.8 DSW7 166

11.5.4.9 DSW15 and RSW2 166
11.5.4.10 DSW16 and RSW1 167
11.5.4.11 SSW1 167
11.5.4.12 SSW2 168
11.5.4.13 LED indication 168
11.6 Optional functions 168
11.6.1 Optional functions for space heating or space cooling 168
11.6.2 Optional functions for DHW 169
11.6.3 Optional functions for Heat pump 169
11.6.3.1 Optional functions for Unit controller (PC-ARFH3E) 170
11.6.4 Optional external input/output configuration signals 170
11.7 Additional functions by accessory sensor 173

11.1 Main features

The Cascade Controller is designed as an extension of the hydraulic control of **airH2O 800** range to establish a larger and efficient heating or cooling system. When Cascade Controller function is active, system separates water generation (hot or cold) from water distribution and consumption.

Water generation is performed on **airH2O 800** Sub units, and water distribution and consumption is done on Main Cascade Controller unit.

- It is a central control device capable to control Sub units that produce hot or cold water.
- It is capable to control up to 8 **airH2O 800** outdoor/indoor units.
- Allows to control the following models (from 4 to 6 HP):
  - ✓ **airH2O 800H**
  - ✓ **airH2O 800H Combi**
  - ✓ Control Box

11.1.1 Multi configurations

The new Cascade Controller has been designed so it can be easily installed in multiple types of system.

The following examples and illustrations are for illustrative purpose and not cover all the possible installations.

◆ Individual heating/cooling household in combination with common DHW production

This installation is suitable in case a high amount of DHW at a specific setting temperature is required.

When Cascade Controller is generating water for DHW tank, production of hot or chilled water for Space Heating/Cooling application is stopped until DHW production stops.

In this scenario, Cascade Controller manage DHW tank and Water temperature production for Space Heating or Cooling:

- C1 buffer tank depicted in the picture is C1 circuit for Cascade Controller.
- C1 buffer tank is managed by means Cascade Controller unit without thermostat.
- Each C2 circuit of each **airH2O 800** Sub unit is assigned to a specific household.
- Each C2 mixing kit of each **airH2O 800** Sub unit guarantees C2 water temperature at each household.
- Each C2 circuit can have a wired or wireless thermostat which is connected to each Sub unit.
- Each C2 circuit can have an Outdoor OTC Temperature by Outdoor unit or Wired Sensor accessory.

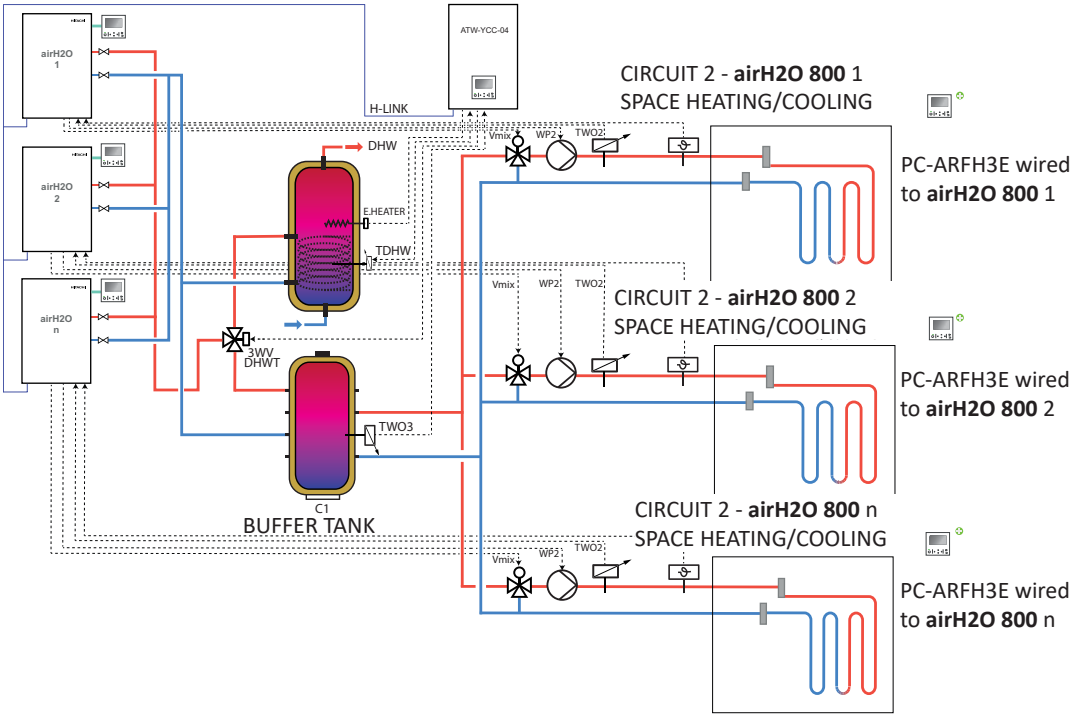

Example for illustrative purpose, refer to the installation manual for more installation examples.

11.1.2 Installation benefits

◆ H-LINK connection between airH2O 800 Sub Units and the Cascade Controller

The **airH2O 800** Units and the Cascade Controller are interconnected through the H-LINK II bus, consisting of 2 non-polarity cables and accepting lengths of up to 1,000 m.

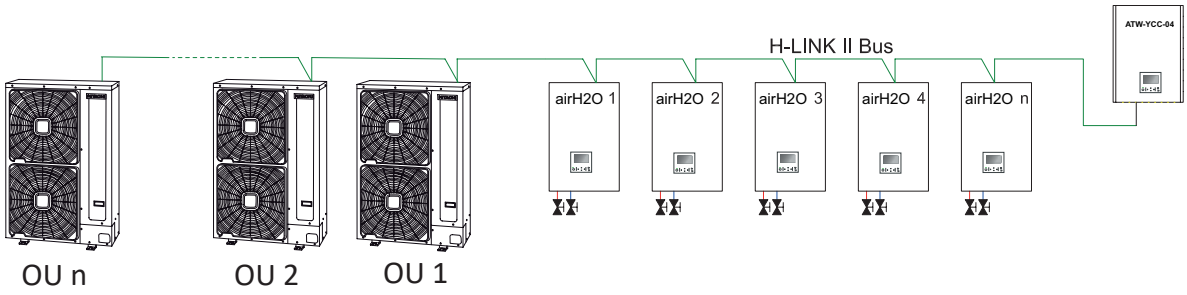

No additional device into each Sub unit

No additional devices need to be installed into individual heat pumps.

Universal mounting concept

The Cascade Controller is designed for direct wall mounting.

The shape of the screw holes allows to preset the screws on the wall, then placing the electrical box and finally tightening the screws.

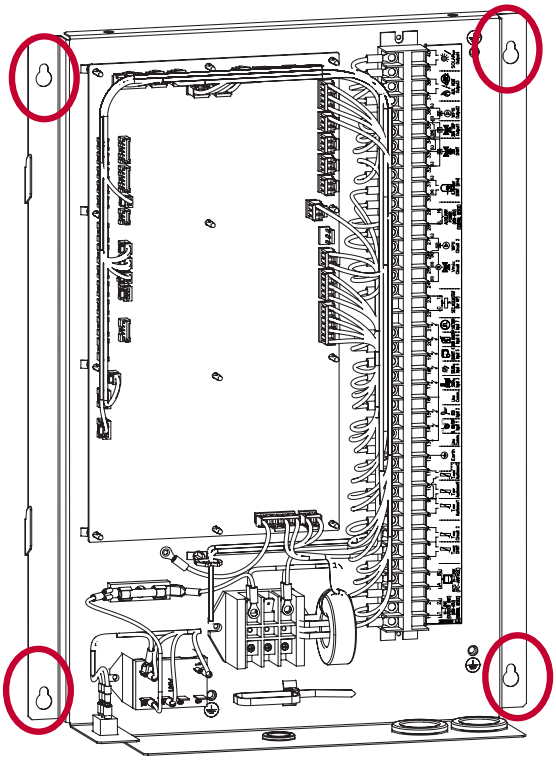

◆ Connection by areas

The connections for power supply and optional function are placed in separate areas of the terminal board.

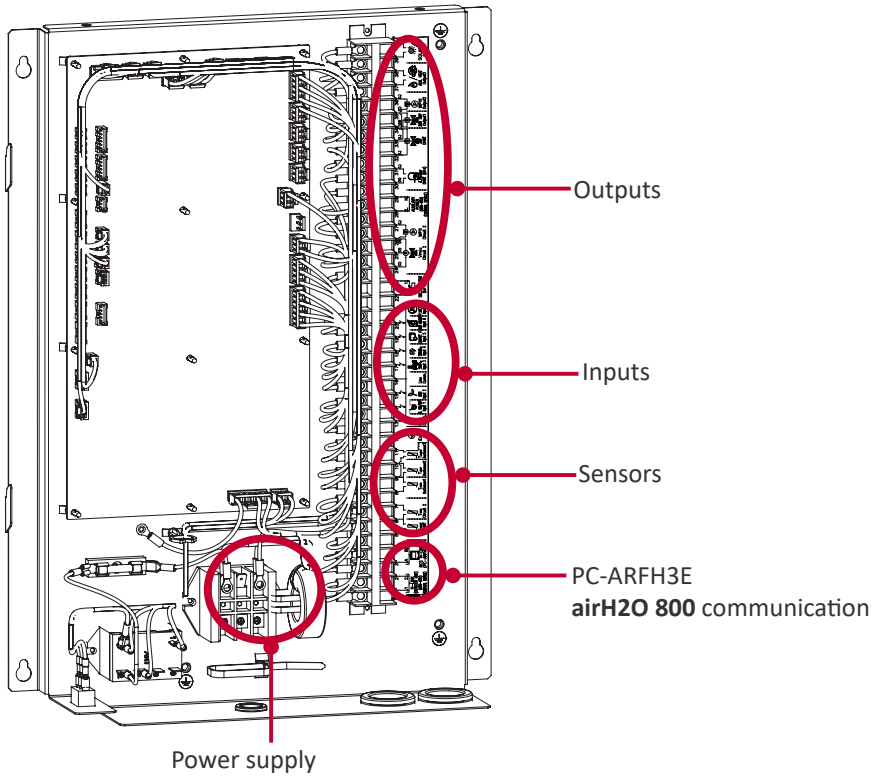

◆ Electrical box with Easy Cover (service cover)

The service cover can be easily placed by just fitting the holes in the cover with the tabs on the electrical box, then fixing two screws at the top side.

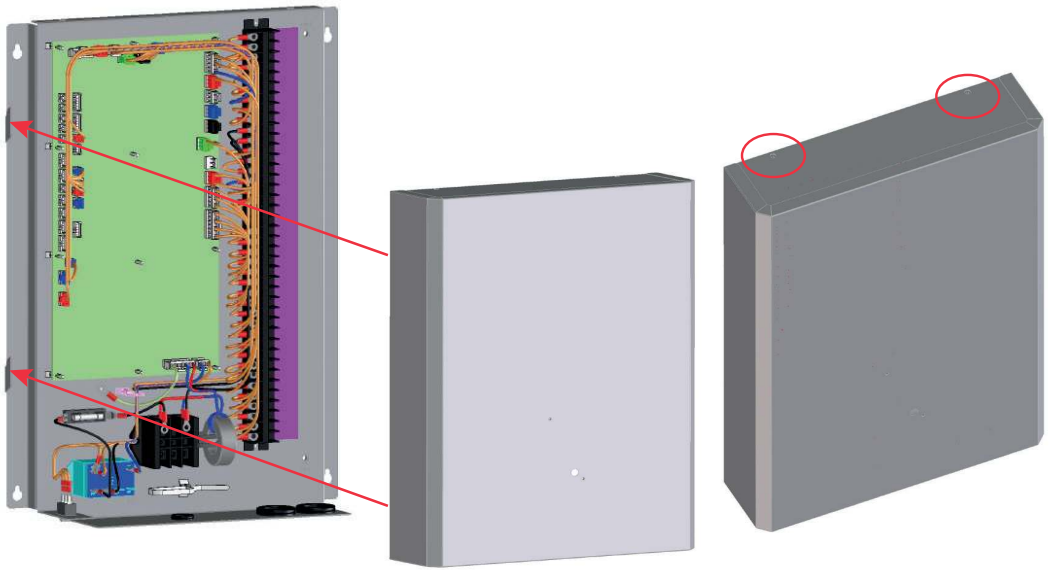

11.1.3 Maintenance benefits

◆ Checking of the operational data of the Sub unit

The Cascade Controller allows monitoring the status of Sub units and therefore provides the user with information about the status of the whole system. The parameters that can be checked for each Sub module are the following:

- Operation status for Sub unit "n"
- Water inlet temperature for Sub unit "n"
- Water outlet temperature for module "n"
- Outdoor unit compressor frequency for module "n"
- Status of DHW for module "n"
- Type of DHW production (Main or Sub) in case that “Status of DHW” for module "n" is “Enabled”

◆ Alarm control

The Cascade Controller has been designed in order to manage alarm notifications generated at the Cascade Controller side and also alarms generated at the Sub unit side. In any case, both types of alarms are displayed at the bottom-left corner of the display of the LCD controller as it is done on the **airH2O 800** Unit.

- Cascade Controller alarms: These alarms are generated at the Cascade Controller side. Alarms can be due to factors such as sensor abnormality, wrong setup of the Cascade Controller, high temperature limitation, freeze protection or abnormalities related to wireless thermostats. Some of these alarms trigger protection controls allowing to continue the operation of the Cascade Controller, while others stop the Cascade Controller in order to protect the unit.
- Sub unit alarms: Alarms generated at the Sub unit side are displayed at the LCD controller with alarm code 21X, where X indicates the number of the Sub unit in which the alarm occurred. For instance, should an alarm of any kind (thermistor, flow, wireless thermostat…) occur in Sub module 3, it is displayed in the LCD controller as “Alarm 213”. As a rule, operation of the Cascade Controller is not stopped in the event of a Sub unit alarm. The only case in which the operation of the Cascade Controller is stopped due to Sub unit alarms (and emergency operation starts as long as it is enabled) is when all the Sub units in the system are in alarm.

11.1.4 Control features

◆ I/O and sensor functions

The terminal board of the new Cascade Controller allows a wide range of configurations, just as in the **airH2O 800** units. In addition to factory presets, the unit controller offers the possibility to adjust the detailed settings of every input, output and sensor port.

The factory default functions of the controller are those indicated in the label of terminal 2, as shown below:

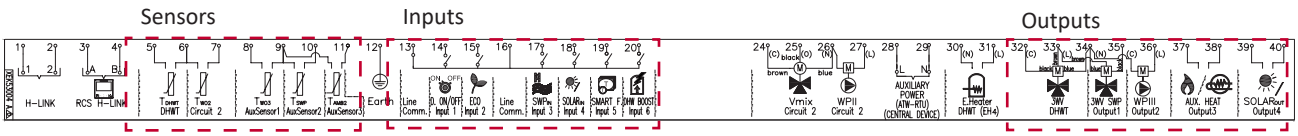

The following input, output and sensor functions can be selected in the “I/O and Sensor” menu of the controller:

Optional outputs:
There are 4 additional available outputs to set. These 4 additional outputs are not wired to the **airH2O 800** terminal board.
In order to use them it is required accessory (field supplied). Its configuration follow same constraints as Standard outputs.

Auxiliary sensors:
There are 7 available auxiliary sensors to set.

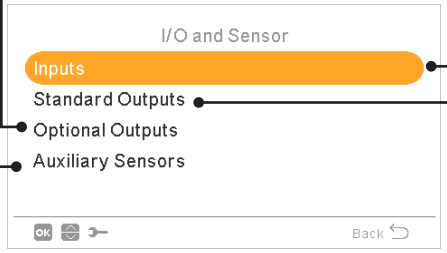

Inputs:
The system allows to set 7 inputs depending on the operations and preferences of the installation.

Standard Outputs:
There are 4 available outputs to set already wired to the terminal board. There are conditions of setting depending on the installation.

List of available inputs

- **Deactivated**
- **Demand ON/OFF** (by default in input 1):
  Consider both Circuit 1 and Circuit 2 in Demand ON when the signal is ON.
- **Demand ON/OFF C1**:
  Consider Circuit 1 in Demand ON when the signal is ON.
- **Demand ON/OFF C2**:
  Consider Circuit 2 in Demand ON when the signal is ON.
- **Power Meter 2**:
  To count any pulse received from the power meter 2 and send to central control energy consumption calculation.
- **ECO C1 + C2**:
  Switch both Circuit 1 and Circuit 2 to ECO mode when input is closed.
- **ECO C1** (by default in input 2, if there is circuit 1 in the installation):
  Switch Circuit 1 to ECO mode when input is closed.
- **ECO C2**:
  Switch Circuit 2 to ECO mode when input is closed.
- **Forced Off**:
  Forbid DHW, space heating and space cooling.
- **Smart Act / SG1** (Fixed in input 5 if smart action is enabled):
  To active Smart Function.
- **Swimming Pool** (Fixed in input 3 if swimming pool is enabled):
  Consider Swimming pool in Demand ON when the signal is ON.
- **Solar** (Fixed in input 4 if solar is enabled):
  To let **airH2O 800** know that external Solar management system is ready to provide Solar energy.
- **Operation**:
  To switch between space cooling and space heating.
- **DHW Boost** (Fixed in input 6 if is DHW Boost is enabled):
  If it is set to open (NC), boost signal ON if circuit is open. If it is set to close (NO), boost signal ON if circuit is closed.
- **Forced Heating**:
  Force mode heating when input is closed.
- **Forced Cooling**:
  Force mode cooling when input is closed.
- **SG2**:
  To active the different estates of Sm Grid Ready.

List of available outputs

- **Deactivated**
- **SWP 3WV** (Fixed in output 1 if swimming pool is enabled):
  Signal control of the 3-way valve of the swimming pool.
- **Water pump 3** (Fixed in output 2 if buffer tank is installed):
  Signal control of the water pump for buffer tank.
- **Boiler** (Fixed in output 3 if boiler is enabled):
  Signal control of the boiler.
- **Solar Pump** (Fixed in output 4 if solar pump is enabled):
  Signal control of the solar pump.
- **Alarm** (By default in output 5):
  Signal is active if there is an alarm.
- **Operation** (By default in output 6):
  Signal active in case Thermo ON in any condition.
- **Cooling** (By default in output 7):
  Signal active when space cooling is operating.
- **Demand-ON C1** (By default in output 8):
  Signal active when there is Demand in circuit 1.
- **Heating**:
  Signal active when space heating is operating.
- **DHW**:
  Signal active when DHW is operating.
- **Solar overheat**:
  Signal is active when solar overheat (only when solar combination status is total control)
- **Defrost**:
  Signal active when outdoor unit is defrosting.
- **DHW Re-circulation**:
  Signal active depending on option selected at chapter Circuit pump.
- **Fan 1 Low**:
  Signal is active when fan coil speed selected for Circuit 1 is set to Low.
- **Fan 1 Medium**:
  Signal is active when fan coil speed selected for Circuit 1 is set to Medium.
- **Fan 1 High**:
  Signal is active when fan coil speed selected for Circuit 1 is set to High.
- **Fan 2 Low**:
  Signal is active when fan coil speed selected for Circuit 2 is set to Low
- **Fan 2 Medium**:
  Signal is active when fan coil speed selected for Circuit 2 is set to Medium.
- **Fan 2 High**:
  Signal is active when fan coil speed selected for Circuit 2 is set to High.
- **Constant Heating**:
  Signal is active in case operation mode of LCD controller is set to Heating.
- **Constant Cooling**:
  Signal is active in case operation mode of LCD controller is set to Cooling.

◆ List of available sensors

- Deactivated
- T_{wo3} (Fixed in sensor 1 if boiler is installed):
  Use this sensor to monitor water temperature when boiler is used.
- **Swimming Pool** (Fixed in sensor 2 if swimming pool is installed):
  Use this sensor when swimming pool is used in order to monitor swimming pool temperature.
- **Solar panel sensor**:
  Use this sensor when Total control is configured to monitor Solar Panel temperature.
- **C1 + C2 Ambient**:
  Use this sensor when auxiliary ambient temperature sensor is used for C1 and C2.
- **C1 Ambient**:
  Use this sensor when auxiliary ambient temperature sensor is used for C1.
- **C2 Ambient**:
  Use this sensor when auxiliary ambient temperature sensor is used for C2.
- **Outdoor sensor (NTC)** (By default sensor 3):
  To connect to the controller an auxiliary outside temperature sensor in case the heat pump is located in a position not suitable for this measurement.

11.1.5 Cascade control

The new Cascade control determines whether a **airH2O 800** Sub unit has to be switched ON or OFF according to heating demand (Water temperature and Water setting temperature).

Up to 8 basic modules can be connected to the Cascade Controller.

The combination of these modules operates as a single system, and allows to achieve higher capacities.

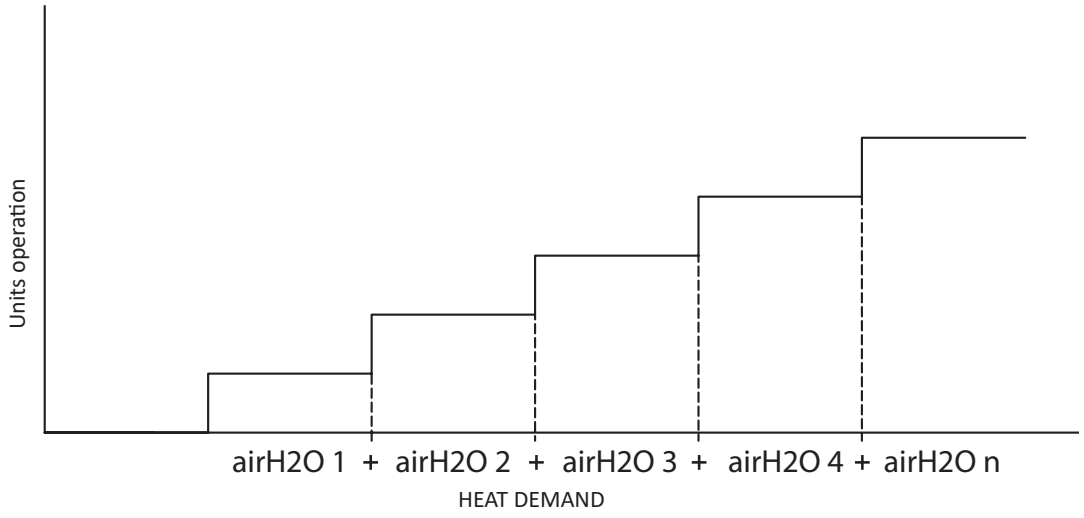

When this control determines that a unit has to be switched ON or OFF, it is the rotary token control which determines the concrete unit to be switched ON or OFF.

11.1.6 Rotary token control

A different Sub unit is started first in each heating up process, in order to balance operation between them.

In case that the Cascade PID Control determines that a unit has to be switched ON in order to satisfy capacity requirements, the Rotary Control switches ON the “Next available Unit”.

In case that the Cascade PID Control determines that a unit has to be switched OFF as it is no longer required to satisfy capacity requirements, the Rotary Control switches OFF the unit that had been switched ON in first place.

Example of Rotary Token Control diagram:

	Time line (1 min)	SU-1	SU-2	SU-3	SU-4	SU-5	SU-6	SU-7	SU-8
1	All Units OFF	0	0	0	0	0	0		0
2	PID determine to switch ON module. YCC switches ON next available Sub Unit	1	0	0	0	0	0		0
3	PID determine to switch ON module. YCC switches ON next available Sub Unit	1	2	0	0	0	0		0
4	PID determine to switch ON module. YCC switches ON next available Sub Unit	1	2	3	0	0	0		0
5	PID determine to switch ON module. YCC switches ON next available Sub Unit	1	2	3	4	0	0		0
6	PID determine to switch ON module. YCC switches ON next available Sub Unit	1	2	3	4	5	0		0
7	Heat Demand. PID does not determine new Unit to be started	1	2	3	4	5	0		0
8	Module 3 is in alarm. YCC switches ON new module instead	1	2		3	4	5		0
9	PID determines to switch OFF a module. YCC switches OFF first module started	0	1		2	3	4		0
10	PID determines to switch OFF a module. YCC switches OFF first module started	0	0		1	2	3		0
11	PID determines to switch ON Module. YCC switches ON next available Unit	0	0	0	1	2	3		4
12	PID determine to switch ON module. YCC switches ON next available Sub Unit	5	0	0	1	2	3		4
13	Sub Unit switches to DHW operation. DHW Sub Unit also. YCC switches ON same amount of Units	3	4	5			1	0	2
14	PID determines to switch OFF a module. YCC switches OFF first module started	2	3	4			0	0	1
15	PID determines to switch OFF a module. YCC switches OFF first module started	1	2	3	0	0	0	0	0
16	In case of Thermo-OFF or Demand OFF, YCC switches OFF all modules	0	0	0	0	0	0	0	0

- Unit OFF
- Unit ON for C1
- Unit ON for Main DHW tank
- Unit ON for Sub DHW tank
- Unit in alarm
- Disabled

11.1.7 Synchronized defrost

The defrosting process of the **airH2O 800** Sub units operating with the Cascade Controller as a group has been improved in order to avoid the drop of heating capacity by not defrosting units at the same time.

The defrost operation of **airH2O 800** outdoor units connected to a Cascade Controller operating as a group is timed in order to limit the effect of the drop in heating capacity caused by simultaneous defrost. This improvement results in a more stable capacity and better comfort.

The beginning of defrosting operation of each **airH2O 800** outdoor unit is established according to the total number of units connected to the Cascade Controller and the individual need to defrost of each **airH2O 800** outdoor unit.

Number of **airH2O 800** units	Number of units in concurrent defrost
2 or 3	Only 1 **airH2O 800** can defrost
4 or 5	Only 1 **airH2O 800** can defrost
5 or 6	Up to 2 **airH2O 800** can defrost at the same time
6 or 7	Up to 2 **airH2O 800** can defrost at the same time
7 or 8	Up to 2 **airH2O 800** can defrost at the same time

11.2 General data

Cascade Controller - ATW-YCC-04	
Power supply	~ 230 V 50 Hz
Maximum current (with DHWT Electrical Heater) / Maximum current (Only electrical BOX)	19 A / 5 A
Maximum input (with DHWT Electrical Heater) / Maximum input (Only electrical BOX)	3.2 kW / 0.8 kW
Ambient temperature range in operation	0 to 40°C
Humidity range in operation	0 to 80% RH non-condensing
Product dimensions	490 x 360 x 100 mm
Packaging dimensions	510 x 380 x 150 mm
Net weight	5.45 kg
Colour of the cover	White, RAL 9016
Maximum diameter of power wiring harness	12 mm

11.3 Electrical data

Model	Main unit power			Applicable voltage		MC [A]
	U [V]	PH	F [Hz]	U max [V]	U min [V]	
ATW-YCC-04 (with DHW electrical Heater)	230	~	50	253	207	16
ATW-YCC-04 (only electrical BOX)	230	~	50	253	207	5

11.4 Electrical wiring

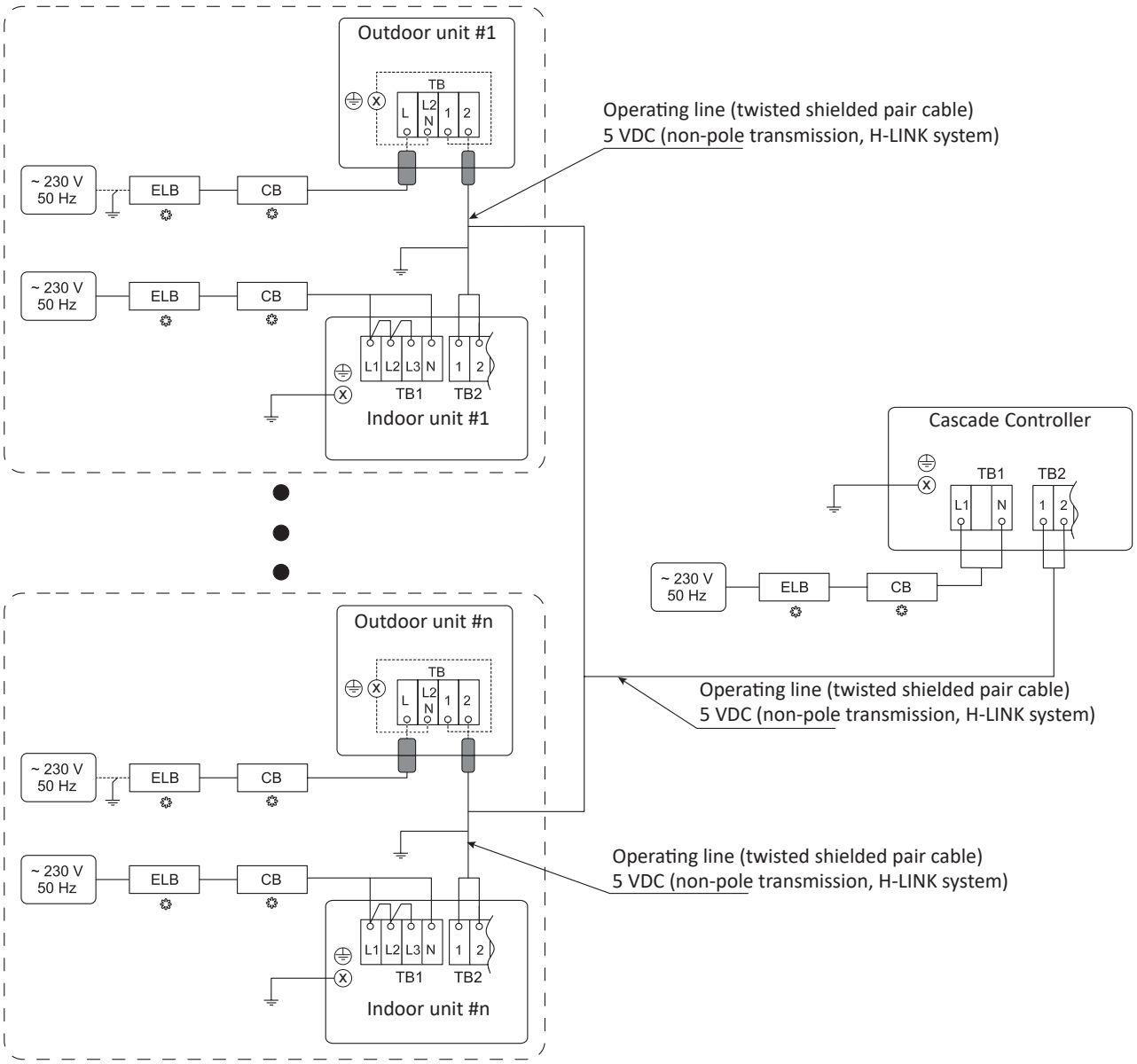

11.5 Transmission wiring

11.5.1 Connections on the Terminal board 1 (TB1)

The followings connections on the Terminal board 1 of the Cascade Controller are required:

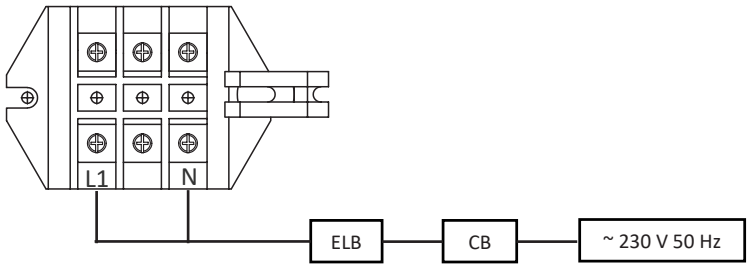

11.5.2 Connections on the Terminal board 2 (TB2)

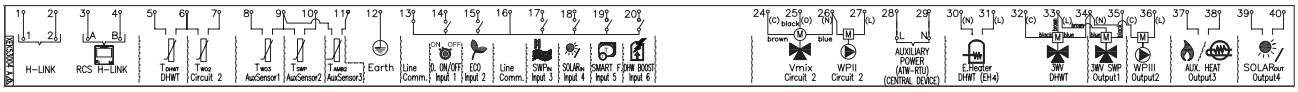

CAUTION

***When installing the Cascade Controller (ATW-YCC-04) electrical connections for the control of the system must be done on the terminal board 2 of the Cascade Controller rather than perform those connections on the terminal board of the* airH2O 800.**

◆ H-LINK connection

The **airH2O 800** units, Cascade Controller and outdoor units are interconnected via bus called H-LINK II, consisting of 2 non-polarity cables and accepting lengths of up to 1000 m. All **airH2O 800** and Outdoor units which are controlled by the same Cascade Controller unit must be connected at the same H-LINK II line:

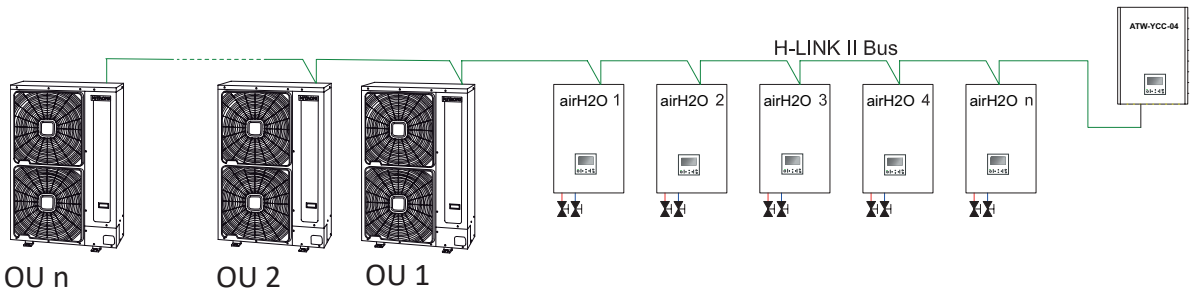

Setting of end terminal resistance

When connecting outdoor units to an H-LINK II line, it is necessary to set the end terminal resistance as active (DSW5-1 ON) in only one of the units. Pin 1 of DSW5 is factory set to ON in all the outdoor units. Therefore, when connecting multiple outdoor units to an H-LINK II line, please check and make sure that only one of the units has pin 1 of DSW5 set to ON, and the rest of the units have pin 1 of DSW5 set to OFF.

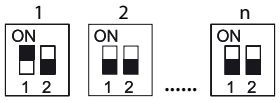

The H-LINK II connection must be done as it is shown in the figure below:

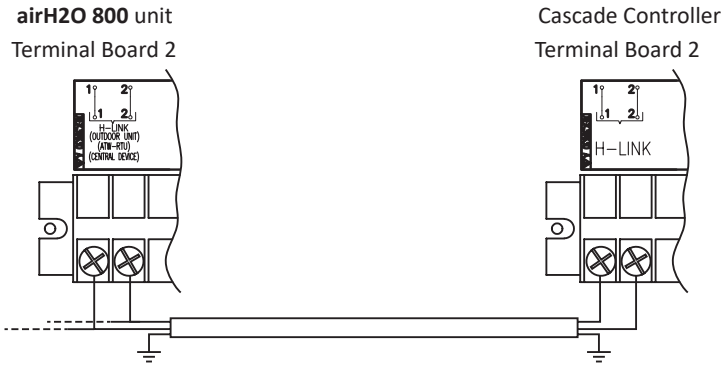

- The H-LINK wiring system requires only two transmission cables that connect the indoor unit and the outdoor unit.
- Use twist pair wires (0.75 mm²) for operation wiring between outdoor unit and indoor unit. The wiring must consist of 2-core wires (Do not use wire with more than 3 cores).
- Use shielded wires for intermediate wiring to protect the units from noise interference. Total H-LINK circuit length shall not exceed 1000 m and a size in compliance with local codes.
- In the event that a conduit tube for field-wiring is not used, fix rubber bushes to the panel with adhesive.

⚠ CAUTION

Ensure that the transmission wiring is not wrongly connected to any live part that could be damaged the PCB.

◆ LCD unit controller (PC-ARFH3E) installation and connection

LCD unit controller (PC-ARFH3E) is supplied bundled with the unit as an accessory.

⚠ CAUTION

It is mandatory to install the unit controller (PC-ARFH3E) in the service cover.

1 Screw the unit controller to the service cover using the assembly holes.
2 Pass the cables of the unit controller through the routing hole.

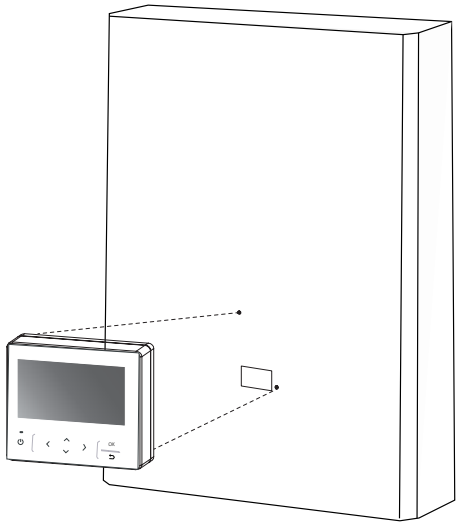

3 Connection for the LCD unit controller PC-ARFH3E should be done on the terminal board 2 of the Cascade Controller as shown in the next figure:

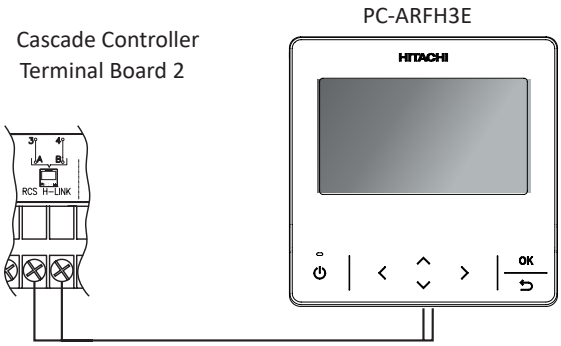

For this purpose, a H-LINK cable (accessory) is necessary.

The torque for the tightening of the screws of each terminal board is explained in the table below.

Terminal board	Tightening torque (N·m)
TB1	2.0~2.5
TB2	1.0~1.3

11.5.3 Summary of the terminal board connections for Cascade Controller

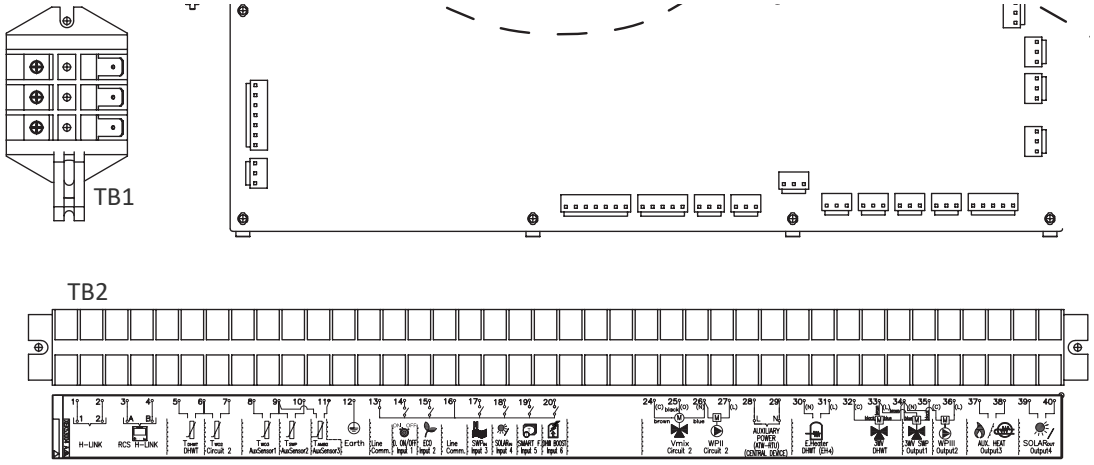

Mark	Part name	Description
		TERMINAL BOARD 2 (TB2)
1	Commutation	Communication between the Cascade Controller and terminals 1-2 of the **airH2O 800** unit, and additionally ATW-RTU-06/07 (for temperature control) and/or ATW-MBS-02 (only for system monitoring).
2		
3	H-LINK communication for remote control switch	Terminals for the connection of the LCD unit controller (PC-ARFH3E) and Wired Room Thermostat (PC-ARFH3E).
4		
5	DHW tank's thermistor	The DHW sensor is used to control the temperature of the domestic hot water tank.
6	Common thermistor	Common terminal for thermistor.
7	Thermistor for water outlet temperature of second cycle	The sensor is used for the second temperature control and should be positioned after the mixing valve and the circulation pump.
8	Thermistor for water outlet temperature after hydraulic separator	Water sensor for hydraulic separator, buffer tank or boiler combination.
9	Common thermistor	Common terminal for thermistors.
10	Thermistor for swimming pool water temperature	The sensor is used for the swimming pool temperature control and should be positioned inside plate heat exchanger of the swimming pool.
11	Thermistor for second ambient temperature	The sensor is used for the second ambient temperature control and it should be positioned outdoors.
12	Earth	Earth connection for the 3 way valve and water pump.
13	Common line	Terminal Line common for input 1 and input 2.
14	Input 1 (Demand ON/OFF) (*)	The air to water heat pump system has been designed to allow the connection of a remote thermostat to effectively control your home's temperature. Depending on the room temperature, the thermostat will turn the split air to water heat pump system ON and OFF.
15	Input 2 (ECO mode) (*)	Available signal which allows to reduce the water setting temperature of circuit 1, circuit 2 or both.
16	Common line	Terminal Line common for inputs 3, 4, 5, 6, 7.
17	Input 3 (Swimming pool) (*)	Only for swimming pool installations: It is necessary to connect an external input to the air to water heat pump to provide signal when the water pump of swimming pool is ON.
18	Input 4 (Solar) (*)	Available input for Solar combination with Domestic Hot Water Tank.

Mark	Part name	Description
19	Input 5 (Smart function) (*)	For the connection of an external tariff switch device to switch OFF the heat pump during peak electricity demand period. Depending on the setting, the heat pump or DHWT will be blocked when signal is open/closed.
20	Input 6 (DHW boost) (*)	Available input for an instantaneous heating of the domestic hot water of the tank.
24(C)	Mixing valve close	When a mixing system is required for a second temperature control, these outputs are necessary to control the mixing valve.
25(O)	Mixing valve open	
26(N)	N Common	
27(L)	Water Pump 2 (WP2)	When there is a second temperature application, a secondary pump is the circulating pump for the secondary heating circuit.
28	Auxiliary power	Power supply for ATW-RTU and central device.
29		
30(N)	Electrical Heater DHW Output	If DHW tank contains an electric heater, the air to water heat pump can activate it if the heat pump cannot achieve the required DHW temperature by itself.
31(L)		
32(C)	3-way valve for DHW tank (output)	The air to water heat pump can be used to heat DHW. This output will be on when DHW is activated.
33(L)	Line (phase)	Line terminal for the 3-way valve for DHW tank and swimming pool.
34(N)	N common (neutral)	Neutral terminal common for 3-way valve of DHW tank and outputs 1 and 2.
35(L)	Output 1 (3-way valve for swimming pool) (*)	The air to water heat pump can be use to heat swimming pool. This output will be ON when swimming pool is activated.
36(L)	Output 2 (Water pump 3 (WP3)) (*)	When there is a hydraulic separator or buffer tank, additional water pump (WP3) is needed.
37	Output 3 (Auxiliary boiler or electric heater) (*)	The boiler can be used to alternate with the heat pump when the heat pump cannot achieve the required temperature by itself.
38		A water electric heater (as accessory) can be used to provide the additional heating required on the coldest days of the year.
39	Output 4 (Solar) (*)	Output for solar combination with Domestic Hot Water Tank.
40		

NOTE

(*): Inputs and outputs explained in the table are the factory-set options. By means of the unit controller, some other inputs and outputs functions can be configured and used. Refer to the Cascade Controller technical documentation and operation manual for detailed information.

11.5.4 Location of DIP switches and rotary switches

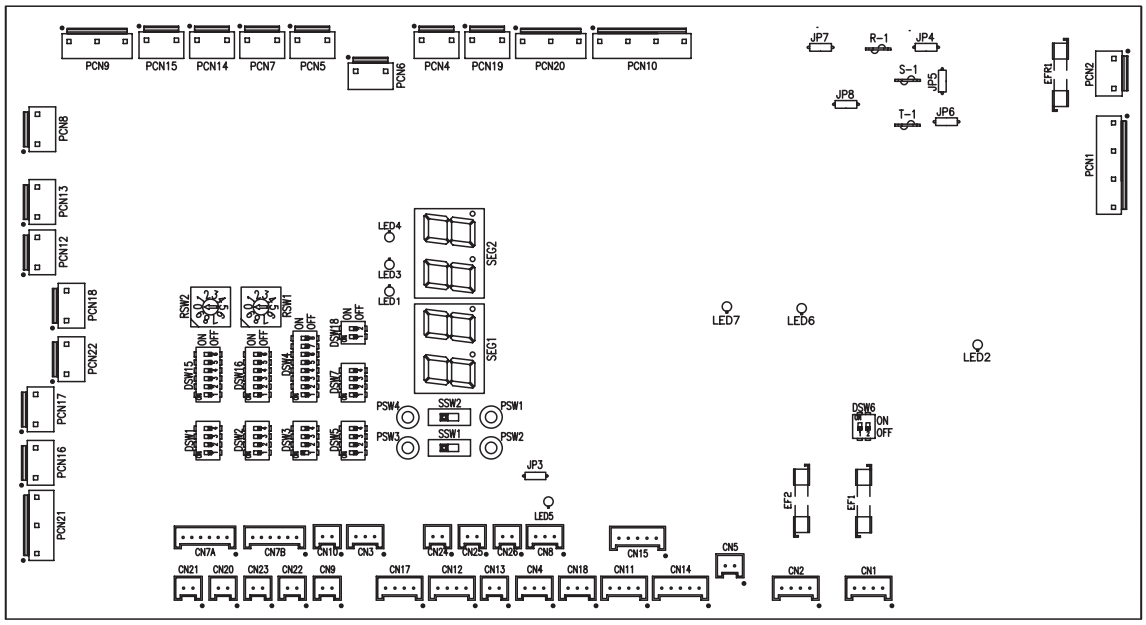

11.5.4.1 Function of DIP switches and rotary switches

NOTE

- *The mark "■" indicates the dip switches positions.*
- *No mark "■" indicates pin position is not affected.*
- *The figures show the settings before shipment or after selection.*
- *"Not used" means that the pin must not be changed. A malfunction might occur if changed.*

CAUTION

Before setting dip switches, first turn the power supply OFF and then set the position of dip switches. If the switches are set without turning the power supply OFF, the contents of the setting are invalid.

11.5.4.2 DSW1

◆ Additional setting 1

DSW1	RASM-(V)TW2E	HWM-W2E(-B)	HWD-W2E-220S(-K)
Factory setting (*)			

(*): In case of installing the "Cooling kit" accessory, set the pin 4 of DSW1 to ON in order to enable the cooling operation.

11.5.4.3 DSW2

◆ Unit capacity setting

Setting is required in order to match with the model of the Sub **airH2O 800** installed.

DSW2	Models	Factory setting
2.0 HP	RASM-2VTW2E	
3.0 HP	RASM-3VTW2E	
3.5 HP	RASM-3.5VTW2E	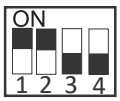
4.0 HP	RASM-4(V)TW2E	
5.0 HP	RASM-5(V)TW2E	
6.0 HP	RASM-6(V)TW2E	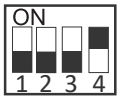

11.5.4.4 DSW3

◆ Additional setting 1

DSW3	
Factory setting	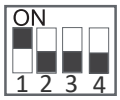
1 step heater for 3 phase unit option	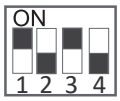

11.5.4.5 DSW4

◆ Additional setting 2

DSW4	
Setting before shipment	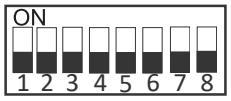
Heater forced OFF	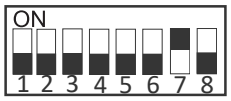
Unit and installation pipes antifreeze protection	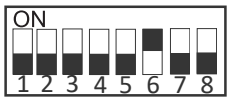
Standard / ECO water pump operation	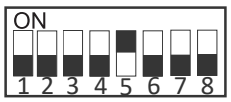
Electric heater or boiler emergency mode	
DHW tank's heater operation	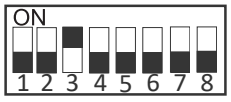

CAUTION

- *Never turn all DSW4 dip switch pins ON. If this happens, the software of the unit will be removed.*
- *Never activate "Heater Forced OFF" and "Electric heater or boiler emergency mode" at the same time.*

11.5.4.6 DSW5

◆ Additional setting 3

In the cases where the outdoor unit is installed into a location where its own outdoor ambient temperature sensor can not give a suitable temperature measurement to the system, it is available the 2nd outdoor ambient temperature sensor as accessory. By means of DSW5 setting, the preferable sensor for each circuit can be selected.

DSW5	
Factory setting	
Outdoor unit sensor for circuits 1 and 2.	
Outdoor unit sensor for circuit 1; Auxiliary sensor for circuit 2.	
Auxiliary sensor for circuit 1; Outdoor unit sensor for circuit 2.	
Auxiliary sensor instead of outdoor unit sensor for both circuits.	

11.5.4.7 DSW6 (only if available)

◆ Not used

DSW6	All units
Factory setting (do not change)	

11.5.4.8 DSW7

◆ Additional setting 4

DSW7	
Factory setting	
Compatibility with ATW-RTU-04 (When cooling mode operation is needed)	

11.5.4.9 DSW15 and RSW2

◆ Refrigerant cycle number setting for Cascade Controller

Set and assign to each outdoor unit a different refrigerant cycle number through DSW4 and RSW1 on the outdoor units PCB.

Set for each unit the same refrigerant cycle than its outdoor unit (DSW15 and RSW2).

	DSW15	RSW2
Factory setting	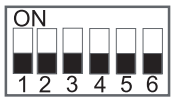	

It is recommended to set the refrigerant cycle number from 0 and correlatively (1,2,3,....) per each module in order to match whit the address number shown in the LCD remote controller. If a different rule is used for assign the refrigerant cycle number it is necessary to set the is set the same refrigerant cycle number in the LCD remote controller.

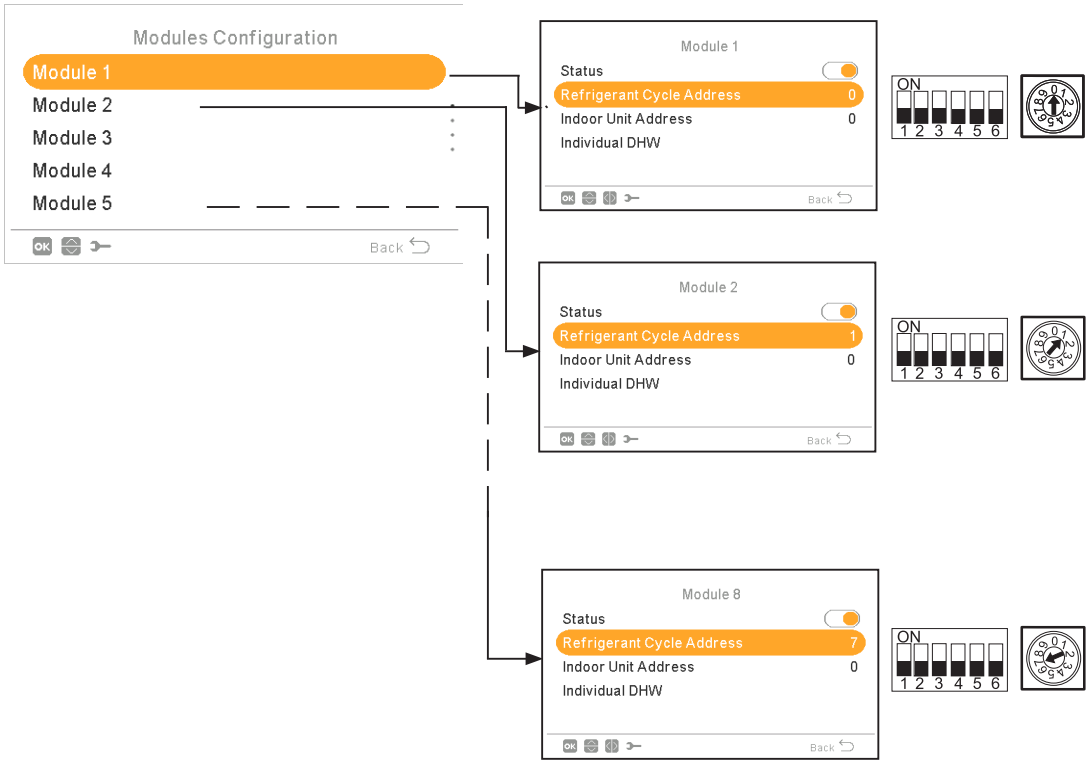

11.5.4.10 DSW16 and RSW1

◆ Not used

	DSW16	RSW1
Factory setting	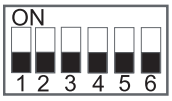	

Don't change this setting, otherwise malfunction will occur.

11.5.4.11 SSW1

◆ Remote/Local

SSW1		
Factory setting	Remote	
Remote operation	Local(*)	

(*) Don't change this setting, otherwise malfunction will occur.

11.5.4.12 SSW2

◆ Heat/Cool (when SSW1 is in local setting)

SSW2		
Factory setting	Heat	
Mode operation	Cool(*)	

(*) Don't change this setting, otherwise malfunction will occur.

11.5.4.13 LED indication

Name	Colour	Indication
LED1	Green	Power indication
LED2	Red	Power indication
LED3	Red	Heat pump operation (thermo ON/OFF)
LED4	Yellow	Alarm (flickering with 1 sec interval)
LED6	Yellow	H-Link transmission
LED7	Yellow	H-Link transmission for unit controller

11.6 Optional functions

11.6.1 Optional functions for space heating or space cooling

Optional function	Explanation
Floor screed drying function (Circuits 1 and 2)	This function is used exclusively for the process of drying screed that has been newly applied to floor heating system. The water temperature set-point follows a predetermined schedule upon activation of the floor screed drying function. For more information refer to Service Manual.
Heating Auto ON/OFF	At higher outside temperatures it doesn't make sense to keep heating the building. The **airH2O 800** system will switch the heating off when the daily average outdoor temperature of previously day rises above the Summer Switch Auto On/Off Activation Temperature. For more information refer to Service Manual.
Auto Heat-Cool	Only available for Cooling and Heating models and cooling mode enabled. By using auto summer switch off average, user can use auto heat cool mode. The end-user sets the desired operation mode on the user interface: Heating, Cooling or Automatic. When Automatic is selected, the change of the operation mode is based on: Averaged outdoor temperature: the operation mode will be changed in order to always be within range determined by the space heating OFF temperature for heating and the space cooling ON temperature for cooling. If the outdoor temperature drops, the operation mode switches to heating and vice versa. For more information refer to Service Manual.
Outdoor temperature average timer	The average timer corrects the influence of ambient temperature variations. The weather-dependent set point calculation is done on the average outdoor temperature. The outdoor temperature is averaged over the selected time period. For more information refer to Service Manual.

11.6.2 Optional functions for DHW

Optional function	Explanation
DHW anti-Legionella protection	A specific setting is available to protect the DHW system against Legionella, which raises up the DHW temperature over the normal DHW tank temperature setting (using the electric heater of the DHW tank and/or the heat pump) on a periodic basis. For more information refer to Service Manual.
DHW re-circulation	This function allows the activation of the water pump for the re-circulation of the hot water from the DHW tank by means of the heat pump. This function can also be used with the anti-legionella protection function. For more information refer to Service Manual.
DHW boost	With this function enabled, it is possible to request a heating up of the DHW when user requires an instantaneous delivery of DHW. For more information refer to Service Manual.
DHW Mode	DHW operation has 2 different modes, STANDARD and HIGH DEMAND : • STANDARD Mode: Behaves the same as Economic mode but it is used the lowest tank sensor to judge water temperature inside tank. This functionality ensure higher quantity of water already heated inside of tank and heating-up process are more frequent. • HIGH DEMAND Mode: The heating of the domestic hot water is started if differential is bigger than TDHWON. It will be started with water tank heater only unless water temperature in tank goes below Heat Pump starting temperature measured with the lowest sensor on tank. For more information refer to Service Manual.

11.6.3 Optional functions for Heat pump

Optional function	Explanation
Hydraulic separator combination	In some cases, water pump of the **airH2O 800** unit is not sized for big heating installation (small water pump). In this case, a hydraulic separator or buffer tank and secondary water pump has to be used to ensure proper water pump dimensioning. The boiler is configured in parallel with the heat pump. A hydraulic separator or buffer tank has to be used to ensure proper hydraulic balancing. Additional Water pump (WP3) and water sensor (T_{wo3}) are needed for boiler combination control (automatic added when Boiler combination is enabled). For more information refer to Service Manual.
Pumps setup	This option allows to configure between 2 hydraulic schemes when hydraulic separator is used. Standard configuration forces WP3 to operate whenever there is demand from Circuit 2. On the other hand, Parallel configuration, allows to connect WP3 and WP2 to the buffer tank, and operation of WP3 is independent to the operation of WP2. For more information refer to Service Manual.
Electrical heater or boiler emergency mode	For the use of the electrical heater or boiler in case of outdoor unit fault, additional setting shall be applied into indoor unit setting: Electrical heater emergency can be both automatic or manual switched ON by the user and the configuration must be done from the Unit controller For more information refer to Service Manual.
Smart Grid ready	This function can be used to block or limit the heat pump or increase demand due to electricity availability. Demand increase is configurable for heating and also for cooling operation. For more information refer to Service Manual.
Fan coil management	In case fan coil is selected as a Heating/cooling emitter, fan speeds can be controlled from Room thermostat and fan coil's fan speeds are controlled from **airH2O 800** optional outputs.

11.6.3.1 Optional functions for Unit controller (PC-ARFH3E)

Optional function	Explanation
UTC Zone	UTC Zone: Europe spans 7 primary time zones (5 of them can be seen on the map in this article, while 2 other zones contain the European part of Kazakhstan and some very eastern territories of European Russia). Most of European countries use daylight saving time and switch to it at the same moment, which is 'harmonise' their summer time adjustment.
European summer time	When European summer time is activated, it should change the time when the country / UTC zone is doing it.
Holidays	Holidays function is only available for room thermostat view of PC-ARFH3E. Holidays let the user specify a date and hour for the Room Setting to be OFF with the configured setting.
Easy adjustment of water setting	If the water temperature setting for zones, as determined by the OTC curve or gradient, does not meet the immediate requirements, the user has the option to apply a +/-5 offset from the Unit LCD without the need to modify advanced parameters.

11.6.4 Optional external input/output configuration signals

The system has 7 input and 4 output optional signals (+ 4 output signals when using accessory). The new **airH2O 800** series allow different ports to be configured for those I/O signals, as well.

The user can configure those input signal to perform different functions from the unit controller. This is briefly explained in the next tables:

Input signals and input ports

Code	Name	Port	Input
i1	Input 1	TB2 #13 and 14	230 V
i2	Input 2	TB2 #13 and 15	230 V
i3	Input 3	TB2 #16 and 17	230 V
i4	Input 4	TB2 #16 and 18	230 V
i5	Input 5	TB2 #16 and 19	230 V
i6	Input 6	TB2 #16 and 20	230 V
i7	Input 7	TB2 #16 and 21	230 V

Input functions (to be configured from the unit controller)

Function #	Input	Description
0	Deactivated	-
1	Demand ON/OFF	Send Demand ON or OFF Operation to Circuit 1 and Circuit 2.
2	Smart Act./SG Ready Input 1	This function must be used to block or limit the heat pump when restricted by Electric company. It allows an external Smart switch device to switch off or reduce consumption of the heat pump during time of peak electricity demand. In case of use of Smart Grid Ready application, this input is used as a digital input 2 and allows four different operating modes.
3	Swimming pool	When **airH2O 800** model is used to warm the swimming pool water, this input is used as a feedback for swimming pool water pump.
4	Solar	In case of combine **airH2O 800** with solar panels, this input is used as a feedback for solar station ready operation.
5	Operation mode	Cool/Heat must be changed by an input of an external contact signal. Contact signal is edge detection; Cool/Heat changeover by unit controller is also available.
6	DHW boost	With this function enabled, it is possible to request a heating up of the DHW when user requires an instantaneous delivery of DHW.
8	Demand ON/OFF C1	Send Demand ON or OFF Operation only to Circuit 1.
9	Demand ON/OFF C2	Send Demand ON or OFF Operation only to Circuit 2.
10	Forced heating	Forced Heating Demand by input of contact signal from outside.
11	Forced cooling	Forced Cooling Demand by input of contact signal from outside.
13	ECO mode C1 and C2	Water temperature setting for Circuit 1 and Circuit 2 it is reduced by ECO operation mode (Default 3°C) by input of contact signal from outside.
14	ECO mode C1	Water temperature setting for Circuit 1 it is reduced by ECO operation mode (Default 3°C) by input of contact signal from outside.
15	ECO mode C2	Water temperature setting for Circuit 2 it is reduced by ECO operation mode (Default 3°C) by input of contact signal from outside.
16	Force OFF	Force OFF operation for unit. RCS will continue as normally set but will show indication that operation is forbidden.
17	SG Ready Input 2	In case of want to use Smart Grid Ready application, this input is used as a digital input 2 and allow four different operating modes.

Output signals and output ports

Code	Name	Port	Output
o1	Output 1	TB2 #34 (N) and 35 (L)	230 V
o2	Output 2	TB2 #34 (N) and 36 (L)	230 V
o3	Output 3	TB2 #37 and 38	Free voltage signal
o4	Output 4	TB2 #39 and 40	Free voltage signal
o5	Output 5	PCN20 #1-2	12 VDC signal
o6	Output 6	PCN21 #1-2	12 VDC signal
o7	Output 7	PCN22 #1-2	12 VDC signal
o8	Output 8	PCN23 #1-2	12 VDC signal

Output functions (To be configured from the unit controller)

Function #	Output	Description
0	Deactivated	-
1	3WV SWP	In case of combine **airH2O 800** with swimming pool, this output is used to drive 3 way valve swimming pools.
2	WP3	In case of combine **airH2O 800** with boiler or hydraulic separator, this output is used to drive water pump 3.
3	Boiler combination	In case of combine **airH2O 800** with boiler, this output is used to switch ON it.
4	Solar pump	In case of combine **airH2O 800** with solar panel, this output is used to drive water pump station.
5	Alarm signal	Output when an “Alarm Code” is received from Indoor Unit or outdoor unit.
6	Operation signal	Output in case that "Thermo-ON" signal in any condition.
7	Cooling signal	Output in case that "Thermo-ON" signal in Cooling operation.
8	Demand-ON signal circuit 1	Signal is enabled when circuit 1 is operating in Demand-ON.
9	Heating signal	Output in case that "Thermo-ON" signal in Heating operation.
10	DHW signal	Output in case that "Thermo-ON" signal in DHW operation.
11	Solar overheat	Output in case that solar temperature signal is active when solar overheat (only when solar combination status is total control).
12	Defrost	Output if the operation state of the outdoor unit when is defrosting.
13	DHW re-circulation pump	In case of re-circulation pump enabled for DHW tank.
14	Fan 1 Low speed	Output for fan coil speed.
15	Fan 1 Medium speed	Output for fan coil speed.
16	Fan 1 High speed	Output for fan coil speed.
17	Fan 2 Low speed	Output for fan coil speed.
18	Fan 2 Medium speed	Output for fan coil speed.
19	Fan 2 High speed	Output for fan coil speed.
20	Constant Heat	Output in high state whenever operation mode from Unit controller is in heating mode.
21	Constant cool	Output in high state whenever operation mode from Unit controller is in cooling mode.

11.7 Additional functions by accessory sensor

Hitachi offers to its users the option to add more functions to the inputs from signals coming from some specific sensors. The configuration for this purpose is explained below:

I/O Terminal name		Port for setting (Connector number)	Factory default setting		Input/Output type
I/O	Display		Setting contents	Function #	
Sensor 1	A1	CN26 #2	T_{wo3}	0	NTC
Sensor 2	A2	CN25 #1-2	Disabled	0	NTC
Sensor 3	A3	CN5 #1	Disabled	0	NTC

Function of sensors

Function #	Input	Description
0	Disabled	-
1	T_{WO3} sensor	T_{wo3} sensor is used when there is external heating source or useful to track better temperature when there is hydraulic separator or buffer tank.
2	Swimming pool	When combining **airH2O 800** with swimming pool, this sensor is used to read the temperature from the water of the swimming pool.
3	Solar panel sensor	When combining **airH2O 800** with solar panels, this sensor is used to read the temperature from the solar panel.
4	Zone 1 and 2 ambient sensor	If Aux1 and Aux2 sensors are both connected and enabled at the unit controller configuration, the detection of ambient temperature value is carried out by these sensors. The ambient temperature setting for each circuit is set from the unit controller or central platform. The temperature value detected by each sensor is applied to the corresponding circuit.
5	Zone 1 ambient sensor	If Aux1 and Aux2 sensors are both connected and enabled at the unit controller configuration, the detection of ambient temperature value is carried out by these sensors. The ambient temperature setting for each circuit is set from the unit controller or central platform. The temperature value detected by each sensor is applied to the circuit 1.
6	Zone 2 ambient sensor	If Aux1 and Aux2 sensors are both connected and enabled at the unit controller configuration, the detection of ambient temperature value is carried out by these sensors. The ambient temperature setting for each circuit is set from the unit controller or central platform. The temperature value detected by each sensor is applied to the circuit 2.
7	Second outdoor ambient	An outside temperature sensor can be directly connected to the controller in case the heat pump is located in a position not suitable for this measurement.

Hitachi certifies that our products have met EU consumer safety, health and environmental requirements.

ER-0198/1996 GA-1999/0044

Johnson Controls-Hitachi Air Conditioning Spain, S.A.U. is certified with:
ISO 9001 of AENOR, Spain for its Quality Management accordance with the standard.
ISO 14001 of AENOR Spain for its Environmental Management systems accordance with the standard.

Hitachi meets the requirements of the KEYMARK Certification Scheme.
See Heat Pump KEYMARK database for detailed information.

Johnson Controls-Hitachi Air Conditioning Spain, S.A.U.
Ronda Shimizu, 1 - Políg. Ind. Can Torrella
08233 Vacarisses (Barcelona) Spain

© Copyright 2025 Johnson Controls-Hitachi Air Conditioning Spain, S.A.U. – All rights reserved.

TCGB0154 rev.1 - 12/2025